IVQs in Engineering (2565)

Level 3 IVQ Technician Diploma in Engineering – Mechanical Engineering – Manufacturing – Mechanical Engineering – Plant Technology (2565-02) (500/5791/1)

Qualification handbook for centres

www.cityandguilds.com
September 2009
Version 2.0

Publications and enquiries
City & Guilds publications are available from

Publications Sales
City & Guilds
1 Giltspur Street
London
EC1A 9DD
United Kingdom
T +44 (0)20 7294 2850
F +44 (0)20 7294 2413

General information about City & Guilds may be obtained from Customer Relations at the above address or on +44 (0)20 7294 2787 or by emailing **intops@cityandguilds.com**.

Equal opportunities
City & Guilds fully supports the principle of equal opportunities and we are committed to satisfying this principle in all our activities and published material.

1 Giltspur Street
London
EC1A 9DD
T +44 (0)20 7294 2468
F +44 (0)20 7294 2400
www.cityandguilds.com

IVQs in Engineering (2565)

Level 3 IVQ Technician Diploma in Engineering – Mechanical Engineering – Manufacturing – Mechanical Engineering – Plant Technology (2565-02) (500/5791/1)

Qualification handbook for centres

ST00029382/09.09/PO4500055961

[This page is intentionally blank]

Contents

05 Important notice
06 Levels of City & Guilds qualifications
07 IVQ in Engineering 2565
07 About City & Guilds
07 Introduction to this programme
07 Certificate
07 Diploma
07 Advanced diploma
07 Full Technological Diploma
07 Making entries for assessments
07 Internal candidates
07 External candidates
07 Resources
08 Assessments
08 Diploma
08 Award number
08 Component numbers
08 Technician Diploma in Applied Mechanical Engineering – Manufacturing
08 Technician Diploma in Mechanical Engineering Theory – Manufacturing
09 Technician Diploma in Applied Mechanical Engineering – Plant Technology
09 Technician Diploma in Mechanical Engineering Theory – Technology
09 Results and certification
10 How to offer this programme
10 Subject approval
10 Examination centre approval
10 Other information
10 Designing courses of study
10 Presentation format of units
10 Practical competences
11 Knowledge requirements
11 Practical assignments
11 Entry levels
11 Progression routes and recognition
11 Useful publications
13 Syllabus
IVQ in Engineering 2565
14 011 Engineering Fundamentals 2
19 Assessment
20 013 Computer Aided Draughting 1
39 014 Engineering Drawing
51 016 Manufacturing Technology
65 017 Manufacturing Theory and Processes
68 Assessment
69 018 Resources
72 Assessment
73 019 Plant Technology
77 Assessment
78 020 Plant Technology Practical Assignments
82 021 Plant Installation and Maintenance
84 Assessment

85 Appendix A
Practical assignments
85 Practical assignments
85 Instructor notes
85 Candidate instructions
85 Marking
85 Supervision
85 Records, results and certification
85 Visiting verifier

[This page is intentionally blank]

Important notice

Following the accreditation of the Technician IVQs in Engineering (2565) on the National Qualifications Framework of England, Wales and Northern Ireland (NQF), some changes have been made to the qualification, at the request of the Office of the Qualifications and Examinations Regulator (Ofqual), the qualifications regulator in England.

These changes took effect on 1 June 2009 and are outlined on this page.

Note: the content of the qualifications has not changed following accreditation.

Changes to the qualification titles
The qualification titles have changed as follows:

Technician Diploma in Engineering – Applied Mechanical Engineering – Manufacturing (2565-02)
changed to
Level 3 IVQ Technician Diploma in Engineering (Mechanical Engineering – Manufacturing) (2565-02)
Accreditation number: 500/5791/1

Technician Diploma in Engineering – Applied Mechanical Engineering – Plant Technology (2565-02)
changed to
Level 3 IVQ Technician Diploma in Engineering (Mechanical Engineering – Plant Technology) (2565-02)
Accreditation number: 500/5791/1

Changes to the unit titles
Following the accreditation of the Technician IVQs in Engineering, each unit has been given an accreditation reference number which will appear on the Certificate of Unit Credit.

The content of the units is unchanged.

Level 3 IVQ Technician Diploma in Engineering (Mechanical Engineering – Manufacturing) (2565-02)
Accreditation number: 500/5791/1

F/502/2566 – Engineering Fundamentals 2
J/502/2567 – Computer Aided Draughting 1 Practical Assignments
L/502/2568 – Engineering Drawing Practical Assignments
R/502/2569 – Manufacturing Technology Practical Assignments
J/502/2570 – Manufacturing Theory and Processes
L/502/2571 – Engineering Resources

Level 3 IVQ Technician Diploma in Engineering (Mechanical Engineering – Plant Technology) (2565-02)
Accreditation number: 500/5791/1

F/502/2566 – Engineering Fundamentals 2
J/502/2567 – Computer Aided Draughting 1 Practical Assignments
L/502/2568 – Engineering Drawing Practical Assignments
R/502/2572 – Plant Technology
Y/502/2573 – Plant Technology Practical Assignments
D/502/2574 – Plant Installation and Maintenance

Registration for theory examination
Registration process for the theory examination has not changed.

Result submission for practical assessment
Result submission process for the practical assessments has not changed.

Change to the grading
The grade 'Credit' has been changed to 'Merit'. All other grades are unchanged. The content of the units concerned is also unchanged.

Notification of Candidate Results (NCR) and Certificate of Unit Credit (CUC)
Notification of Candidate Results (NCR) and Certificate of Unit Credit (CUCs) continue to be available on completion of each assessment (theory or practical).

Final certificate will be issued on successful completion of all the required assessments.

'Theory only' routes
The 'Theory only' routes continue to be available as unaccredited qualifications.

Changes to the certificate layout
Certificates issued on completion of an accredited IVQ show the accredited title and the accreditation number for the qualification. The level in the accredited title refers to the NQF level the qualification is accredited at.

The certificate also lists all the units achieved, including the grade and the unit accreditation number.

The certificate carries the logos of the regulatory authorities in England, Wales and Northern Ireland indicating that the NQF accreditation only applies to these countries.

Levels of City & Guilds qualifications

All City & Guilds qualifications are part of an integrated progressive structure of awards arranged over eight levels, allowing people to progress from foundation to the highest level of professional competence. Senior awards, at levels 4 to 7, recognise outstanding achievement in industry, commerce and the public services. They offer a progressive vocational, rather than academic, route to professional qualifications. An indication of the different levels and their significance is given below.

NQF level#	City & Guilds qualifications/programmes	Other qualifications*
8	Fellowship (FCGI)	Doctorate
7	Membership (MCGI) Master Professional Diploma Level 5 vocational awards NVQ/SVQ Level 5	Master's Degree Postgraduate Diploma Postgraduate Certificate
6	Graduateship (GCGI) Associateship (ACGI)**	Bachelor's Degree Graduate Certificate and Diploma
5	Level 5 IVQ Advanced Technician Diploma Full Technological Diploma	Higher National Diplomas Foundation Degree Diplomas of Higher and Further Education
4	Licentiateship (LCGI) Higher Professional Diploma Level 4 vocational awards NVQ/SVQ Level 4	Certificate of Higher Education
3	Level 3 IVQ Advanced Diploma Level 3 IVQ Specialist Advanced Diploma*** Level 3 IVQ Technician Diploma Level 3 vocational awards NVQ/SVQ Level 3	A Level Scottish Higher Advanced National Certificate in Education BTEC National Certificate/Diploma
2	Level 2 IVQ Diploma Level 2 IVQ Specialist Diploma*** Level 2 IVQ Technician Certificate Level 2 vocational awards NVQ/SVQ Level 2	GCSE grades A*-C Scottish Intermediate 2/Credit S Grade BTEC First Certificate
1	Level 1 IVQ Certificate Level 1 vocational awards NVQ/SVQ Level 1	GCSE grades D-G Scottish Intermediate 1/General S Grade Scottish Access 1 and 2

National Qualifications Framework of England, Wales and Northern Ireland (NQF)
* Broad comparability in level
** Only graduates of the City & Guilds College, Imperial College of Science, Technology and Medicine, are awarded the Associateship (ACGI)
*** Part of a new qualification structure which is being introduced across the IVQ provision
IVQ International Vocational Qualifications
NVQ National Vocational Qualifications

About City & Guilds

We provide assessment and certification services for schools and colleges, business and industry, trade associations and government agencies in more than 100 countries. We have over 120 years of experience in identifying training needs, developing assessment materials, carrying out assessments and training assessment staff. We award certificates to people who have shown they have mastered skills that are based on world-class standards set by industry. City & Guilds International provides a particular service to customers around the world who need high-quality assessments and certification.

Introduction to this programme

We have designed the Technician Diplomas in Mechanical Engineering programme for those undergoing training or employed in this area of work. The programme aims to reflect the international nature of the knowledge and skills and activities needed for different countries or cultures.

We do not say the amount of time a candidate would need to carry out the programme, but we do provide advice on guided learning hours for each unit at each level (see below). The programme has three levels.

Certificate
The certificate awards (about 300-450 guided learning hours) provide a broad introduction to the theory and practical sides of engineering for a front-line worker or a person beginning an academic training programme.

Diploma
The diploma (about 600 guided learning hours) provides more practice involving a broader range of skills appropriate to a person who may also supervise, or who is going on into higher education.

Advanced diploma
The advanced diploma (about 600 guided learning hours) takes these skills to the level appropriate for a person preparing for or working in first-level management. It is also appropriate for someone who wants to receive specialised training at a high level.

We stress that these figures are only a guideline and that we award certificates and diplomas for gaining and showing skills by whatever mode of study, and not for periods of time spent in study.

We provide certificates for all work-related areas at seven levels within our structure of awards shown in appendix B. This programme covers level 3. The standards and assessments for the Certificate (level 2) and the Advanced Diploma (level 4) are published separately.

Full Technological Diploma
We will award the Full Technological Diploma (FTD) in Engineering to someone who is at least 21, who has had at least two years relevant industrial experience, and who has successfully finished the assessments for the diploma and advanced diploma levels of this award. If candidates enter for this diploma, they must also send us a portfolio of evidence to support their application.

Making entries for assessments

Candidates can only be entered for the assessments in this subject if the approved examination centres agree. Candidates must enter through an examination centre we have approved to carry out the assessments for 2565 Technician Diplomas in Mechanical Engineering.

There are two ways of entering candidates for assessments.

Internal candidates
Candidates can enter for examinations if they are taking or have already finished a course at a school, college or similar training institution that has directed their preparation whether by going to a training centre, working with another institution, or by open learning methods.

External candidates
These are candidates who have not finished a programme as described above. The examination centres must receive their application for entry well before the date of the examination concerned. This allows them to act on any advice you give about assessment arrangements or any further preparation needed. External candidates must carry out practical assignments and projects if necessary, and they will need extra time and guidance to make sure that they meet all the requirements for this part of the assessment.

In this publication we use the term 'centre' to mean a school, college, place of work or other institution.

Resources

If you want to use this programme as the basis for a course, you must read this booklet and make sure that you have the staff and equipment to carry out all parts of the programme. If there are no facilities for realistic practical work, we strongly recommend that you develop links with local industry to provide opportunities for hands-on experience.

Assessments

There is one level of this award.

Diploma

We use a numbering system to allow entries to be made for our awards. The numbers used for this programme are as follows.

Award number

2565-02 Technician Diploma in Applied Mechanical Engineering – Manufacturing

Technician Diploma in Mechanical Engineering Theory – Manufacturing

Technician Diploma in Applied Mechanical Engineering – Plant Technology

Technician Diploma in Mechanical Engineering Theory – Plant Technology

We use award numbers to describe the subject and level of the award.

Component numbers

011 Engineering Fundamentals 2
013 Computer Aided Draughting 1 Practical Assignments
014 Engineering Drawing Practical Assignments
016 Manufacturing Technology Practical Assignments
017 Manufacturing Theory and Processes
018 Resources
019 Plant Technology
020 Plant Technology Practical Assignments
021 Plant Installation and Maintenance

We use component numbers to show units for which we may award a certificate of unit credit.

We use these numbers throughout this booklet. You must use these numbers correctly if you send forms to us.

Technician Diploma in Applied Mechanical Engineering – Manufacturing

To carry out what is needed for the Technician Diploma in Applied Mechanical Engineering – Manufacturing, candidates must be successful in all of the following assessments.

2565-02-011 Engineering Fundamentals 2 (written paper which lasts three hours)

[2565-02-013] Computer Aided Draughting 1 Practical Assignments

[2565-02-014] Engineering Drawing Practical Assignments

[2565-02-016] Manufacturing Technology Practical Assignments

2565-02-017 Manufacturing Theory and Processes (written paper which lasts three hours)

2565-02-018 Resources (written paper which lasts one and a half hours)

(Total three written papers)

The practical assignments are carried out during the learning programme and should be finished by the date of the written examination so you can send all the results to us. (See appendix A.)

To receive this award, candidates must complete the following practical assignments.

013/1, 013/2, 014/1, 014/2, 014/3, 014/4, 016/1.

(Total seven practical assignments).

Technician Diploma in Mechanical Engineering Theory – Manufacturing

To carry out what is needed for the Technician Diploma in Mechanical Engineering Theory – Manufacturing, candidates must be successful in all of the following assessments.

2565-02-011 Engineering Fundamentals 2 (written paper which lasts three hours)

2565-02-017 Manufacturing Theory and Processes (written paper which lasts three hours)

2565-02-018 Resources (written paper which lasts one and a half hours)

(Total three written papers)

There are no practical assignments for this award.

Technician Diploma in Applied Mechanical Engineering – Plant Technology
To carry out what is needed for the Technician Diploma in Applied Mechanical Engineering – Plant Technology, candidates must be successful in all of the following assessments.

2565-02-011	Engineering Fundamentals 2 (written paper which lasts three hours)
[2565-02-013]	Computer Aided Draughting 1 Practical Assignments
[2565-02-014]	Engineering Drawing Practical Assignments
2565-02-019	Plant Technology (written paper which lasts three hours)
[2565-02-020]	Plant Technology Practical Assignments
2565-02-021	Plant Installation and Maintenance (written paper which lasts one and a half hours)
	(Total three written papers)

The practical assignments are carried out during the learning programme and should be finished by the date of the written examination so you can send all the results to us. (See appendix A.)

To receive this award candidates must complete the following practical assignments.

013/1, 013/2, 014/1, 014/2, 014/3, 014/4, 020/1, 020/2.
(Total eight practical assignments)

Technician Diploma in Mechanical Engineering Theory – Technology
To carry out what is needed for the Technician Diploma in Mechanical Engineering Theory – Plant Technology, candidates must be successful in all of the following assessments.

2565-02-011	Engineering Fundamentals 2 (written paper which lasts three hours)
2565-02-019	Plant Technology (written paper which lasts three hours)
2565-02-021	Plant Installation and Maintenance (written paper which lasts one and a half hours)
	(Total three written papers)

There are no practical assignments for this award.

We provide assessments in two ways.

a Fixed date
These are assessments which are carried out on dates and times we set. These assessments have no brackets around their numbers.

b Free date
These are assessments which are carried out at a college or other training establishment on a date or over a period which the college chooses. These assessments have brackets around their numbers.

In this programme the written assessments are fixed date. The practical assessments and the projects are free date.

You must carry out assessments according to our International Directory of Examinations and Assessments. If there are any differences between information in this publication and the current directory, the Directory has the most up-to-date information.

Results and certification

Everyone who enters for our certificates, diplomas, and advanced diplomas receives a 'Notification of Candidate Results' giving details of how they performed.

If candidates successfully finish any assessment within this programme (for example, any one of the examination papers) they will receive a certificate of unit credit towards the certificate or diploma for which they are aiming. We grade course work assessments as pass or fail. We grade written assessments on the basis of fail, pass, credit or distinction. The certificate of unit credit will not mention assessments which they do not enter, which they failed or from which they were absent.

Each certificate or diploma clearly states what candidates need for full certification at the relevant level, allowing schools, colleges and employers to see whether they have met the full requirements.

If candidates successfully finish all the requirements for a full certificate or a diploma, they will automatically receive the appropriate certificate.

We will send the 'Notification of Candidate Results', certificates of unit credit, certificates, diplomas and advanced diplomas to the examination centre to be awarded to successful candidates. It is your responsibility to give the candidates the certificates. If candidates have a question about the results and certificates, they must contact you. You may then contact us if necessary.

We will also send you a results list showing how all candidates performed.

How to offer this programme

To offer this programme you must get approval from us. There are two categories of approval.

Subject approval
We give approval to offer a teaching course based on this syllabus.

Examination centre approval
We give approval to enter candidates for examinations.

To be approved by us to offer a teaching course you must send us the application form.

To enter candidates for examinations you must be approved by us as an examination centre. For this programme it is possible to act as a registered examination centre only, and accept external candidates. Approved examination centres must provide suitable facilities for taking examinations, secure places to keep the examination papers and materials, and may have an appointed Visiting Verifier to review practical work.

After we have received and accepted an application, we will send an approval letter confirming this. You can then send entries in at any time using the International Directory of Examinations and Assessments for guidance.

Please note that in this section we have provided an overview of Centre approval procedures. Please refer to the current issue of 'Delivering International Qualifications – Centre Guide' for full details of each aspect of these procedures.

Other information

Designing courses of study

Candidates for the various Technician Awards in Engineering will have come from different backgrounds and will have different employment and training experiences. We recommend the following:

- carry out an assessment of the candidates' achievements so you can see what learning they already have and decide the level of entry they will need; and
- consider what learning methods and places will best suit them.

When you assess a candidate's needs, you should design teaching programmes that consider:

- what, if any, previous education qualifications or training the candidate has, especially in the various general vocational education certificates we provide; and
- what, if any, previous practical experience the candidate has which is relevant to the aims of the programme and from which they may have learned the relevant skills and knowledge.

When you choose learning methods and places, you should consider the results of your assessments and whether the following are available.

- Open or distance learning material.
- Workplace learning that can be carried out on site or between you and a local workplace. This will allow the candidates access to specialised equipment and work experience.
- Working with other registered centres to share facilities.
- Opportunities for co-operative learning between candidates for different certificates who need to gain similar skills.

As long as the candidates meet the aims of this learning programme the structures of courses of study are up to you. So, it is possible to include extra topics that meet local needs.

You should avoid teaching theory alone. As far as possible the practical work should be closely related to work in the classroom so that candidates use their theory in a realistic work environment. You can use formal lectures in the classroom with appropriate exercises and demonstrations. Candidates should keep records of the practical work they do so they can refer to it at a later date.

We assume that you will include core skills, such as numeracy, communication, working with people, and organisation and planning throughout a teaching programme.

Presentation format of units

Practical competences
Each unit starts with a section on practical competences which shows the practical skills candidates must have.

At times we give more detail about important words in each 'competence statement'.

For example

'4.1 Select in terms of properties, ease of handling, availability, form of supply (eg round, square, sheet, plate) and cost, suitable materials for given mechanical and electrical components, using appropriate data sources.
Sources: text books, catalogues, standards (BS/ISO), data sheets, computer database.'

In the above statement the word 'sources' is given as a range which the candidate should be familiar with. Candidates should cover the complete range. When a range starts with the abbreviation 'eg' the candidates only need to cover some of the ranged areas or you can use suitable alternatives.

Knowledge requirements
Immediately after the section on practical competences the unit tells you what knowledge is needed for that area. The knowledge needed is closely linked to the practical competences, so it is best to teach the two together so that the candidate appreciates the topic more.

Practical assignments
You should make sure all practical assignments are supervised and instructors should make sure that the results reflect the candidate's own work. You must hold all the documents and material in a file (portfolio) for each candidate for eight weeks after the application for a certificate. You must also keep separate records of the dates of all attempts by each candidate.

Entry levels

We consider the following programmes to be relevant preparation for this programme.

Mechanical Engineering Technicians Part 1 (2550)

Refrigeration Technicians Part 1 (2570)

Technician Certificate in Engineering (2565)

We also consider the following Pitman Qualifications award as relevant alongside this programme.

English for Speakers of Other Languages – higher intermediate level

If candidates do not have the above qualifications, they should have secondary school learning passes in English, mathematics and science.

Progression routes and recognition

We consider the following programmes to be relevant progression routes from this programme.

Advanced Technician Diploma Awards in Engineering (2565)

A number of UK universities and other higher-education institutions will accept success at diploma or advanced diploma level of this programme for direct entry onto higher-level programmes. The decision to accept a candidate on to a degree programme, and the level of entry, is up to the institution. We provide details of organisations recognising achievement in this programme.

Useful publications

We can provide a list of suggested text books covering specific areas of this programme. We may also have knowledge about other support materials. You should make sure that you have the latest information. We will automatically send updated lists to centres we have approved to offer this programme.

3129 Crystal Mark
Clarity approved by Plain English Campaign

Plain English Campaign's Crystal Mark only covers the Technician Awards in Engineering regulations.

[This page is intentionally blank]

Syllabus
IVQ in Engineering 2565

Component numbers
011 Engineering Fundamentals 2
013 Computer Aided Draughting 1
014 Engineering Drawing
016 Manufacturing Technology
017 Manufacturing Theory and Processes
018 Resources
019 Plant Technology
020 Plant Technology – Practical assignments
021 Plant Installation and Maintenance

011 Engineering Fundamentals 2

Introduction

The aim of this unit is to further develop the concepts and skills acquired at Certificate level. It also supports a range of units at the Diploma level and serves as a pre-requisite for further studies.

Mathematics

Knowledge requirements

Instructors must ensure that candidates are able to:

Statistics

11.1 Collect data from practical work in other subjects and from publications.

11.2 Distinguish between discrete and continuous data.

11.3 Distinguish between a sample and a population.

11.4 Determine the range and approximate density of the data and use this information to form appropriate groups (equal and unequal) to cover the set of data.

11.5 Define frequency and relative frequency.

11.6 Determine, using a tally count, the frequency and hence the relative frequency of objects in each group.

11.7 Identify the data using either the frequencies or relative frequencies by suitable fully labelled diagrams.
Diagrams: bar charts, component bar charts, pie charts, pictograms

11.8 Use a labelled histogram and frequency polygon to represent a given set of data.

11.9 Calculate cumulative frequencies and draw an ogive.

11.10 Interpret descriptive data summarised in tables and in diagrams.

11.11 Describe the need to measure the dispersion of data.

11.12 Define standard deviation and variance.

11.13 Calculate values of standard deviation for both grouped and ungrouped data.

Logarithms

11.14 Define x as $lg\ N$ when $N = 10^x$

11.15 Define x as $ln\ N$ when $N = e^x$

11.16 Define the inverse of $a^x = y$ as $x = log_a y$

11.17 Apply change of base rule where $log_a(x) = \dfrac{log_b x}{log_b x}$

11.18 State and apply the laws of logarithms in the following forms where b is any base
Forms:

$log_b MN = log_b M + log_b N$, $log_b M/N = log_b M - log_b N$, $log_b N^a = a\ log_b N$

Algebra

11.19 Simplify and evaluate algebraic expressions involving negative indices.

11.20 Evaluate algebraic expressions involving fractional indices expressed in both numerator/denominator and decimal form.

11.21 Transpose formulae which contain a root or power.

11.22 Transpose formulae in which the subject appears in more than one term.

11.23 Simplify and evaluate algebraic expressions involving whole number indices.

11.24 Simplify and evaluate algebraic expressions involving negative number indices.

11.25 Solve linear equations. Solve a pair of simultaneous linear equations in two unknowns by both substitution and elimination.

11.26 Factorize quadratic expressions of the form of $ax^2 = bx + c$ and solve quadratic equations by factorisation and formula.

Geometry and trigonometry

11.27 Express angular rotations in multiples of radians. One rotation is 2π radians

n rotations is $2\pi n$ radians

11.28 Use the relationship $s = r\theta$ to determine the length of arc of a circle.

11.29 Use the relationship $A = \frac{1}{2}r^2\theta$ to determine the area of a sector of a circle.

11.30 Solve problems involving areas and angles measured in radians.

11.31 Define trigonometric functions of an acute angle.
Trigonometric functions: sine, cosine, tangent

11.32 Obtain values for the three trigonometric functions for angles of any magnitude from tables and from a calculator.

11.33 Determine an acute angle given a trigonometric function value. Angle obtained from $\sin^{-1}\theta$; $\cos^{-1}\theta$; $\tan^{-1}\theta$

11.34 State the relationships: $\cos\theta = \sin(90^\circ - \theta)$ and $\sin\theta = \cos(90^\circ - \theta)$ for values of θ from 0 to 90°

11.35 Solve problems by using trigonometric function values and/or Pythagoras' theorem.

11.36 Apply the sine and cosine rules to the solution of any triangle given sufficient information.
Sine Rule: $a/\sin A = b/\sin B = c/\sin C$
Cosine Rule: $a^2 = b^2 + c^2 - 2bc\cos A$
Information: one side and any 2 angles, two sides and an angle opposite to one of the given sides, two sides and the angle between them, three sides

Graphs

11.37 Solve graphically a pair of simultaneous equations in two unknowns.
Linear equations:

$y = m_1x + c$
$y = m_2x + c_2$

11.38 Sketch graphs of parabolas relating to quadratics.
Parabolas:

$y = ax^2$
$y = ax^2 + c$
$y = (x + b)^2$
$y = (x + b)^2 + c$
$y = ax^2 + bx + c$

11.39 Approximate the gradient of a non-linear graph by defining the slope of a secant line between two points on the curve.

11.40 Understand the accuracy of the above approximation improves when the two points are brought closer together.

11.41 Approximate areas under non-linear graphs and the x-axis by splitting the region into uniform trapeziums.
Non-linear graphs: parabolas, cubics, logarithmic, sinusoidal

11.42 Understand the accuracy of the above approximation improves as the number of trapeziums within the defined region is increased.

11.43 Recognise the characteristic graphical and algebraic form of linear functions, eg $y = mx + c$

11.44 Sketch graphs of linear functions and identify slopes and intercepts and determine the corresponding linear laws.

11.45 Identify polynomial functions of order 2 or more results in a non-linear graph.

11.46 Sketch graphs of simple quadratic functions, identify the intercept and where appropriate the roots.

11.47 Identify that an odd-degree polynomial possesses at least one real root.

11.48 Sketch graphs of simple trigonometric functions and identify their periodic nature.
Functions: sine, cosine, tangent

11.49 Sketch graphs of simple exponential and logarithmic functions.

Calculus

11.50 Determine average and instantaneous gradients of graphs of simple functions.
Simple functions:

$y = mx + c$
$y = ax^2$
$y = e^{kx}$
$y = \sin x$

11.51 Deduce the chord of a graph reduces to the tangents at a point as the arc reduces to zero.

11.52 Identify δx and δy as incremental changes between two points on graph.

11.53 Define $\frac{dy}{dx}$ as the limiting value of the ratio $\frac{\delta y}{\delta x}$ when $dx \rightarrow 0$ and hence as the gradient of a graph at a particular point.

11.54 Determine the instantaneous gradient of simple functions using standard rules.
Standard rules:

$\frac{d}{dx}(x^n) = nx^{n-10}$, $\frac{d}{dx}(\sin x) = \cos x$, $\frac{d}{dx}(e^{kx}) = ke^{kx}$

11.55 Define integration as inverse of differentiation.

11.56 State the importance of a constant of integration.

11.57 Determine the indefinite integrals $\int y\,dx$ for $y = ax^n$, $y = \sin x$, $y = e^{kx}$

11.58 Define $\int_a^b y\,dx$ as the area under the graph between ordinates $x = a$ and $x = b$.

11.59 Determine the areas under graphs of simple functions.

Science

Knowledge requirements

Instructors must ensure that candidates are able to:

Statics

11.60 Resolve a force into rectangular components.

11.61 Solve problems involving the triangle of forces theorem and application of the principle of concurrence.

11.62 Define a couple and describe its magnitude as a torque.

11.63 Use the principle of moments to calculate the support reactions of a loaded simply supported beam.
Loading: concentrated, uniformly distributed, combined

Stress and strain

11.64 Define stress and its unit N/m^2 or Pa
Stress: direct tensile and compression, single shear

11.65 Solve problems involving calculation of values of stress.

11.66 Define direct strain.

11.67 Explain Hook's law and define Young's modulus.

11.68 Define and explain the term factor of safety as applied to direct and shear loading.

11.69 Solve problems involving direct stress, strain, Young's modulus and factors of safety.

11.70 Explain the distinction between single and double shear.

11.71 Solve problems involving shear stress, ultimate shear strength and factors of safety.
Problems: rivetted and pinned joints, flanged shaft couplings, shearing and punching of flat plates

Kinematics

11.72 Explain why speed is a scalar quantity whereas velocity and acceleration are vector quantities.

11.73 Derive the equations for uniformly accelerated linear motion.
Equations:

$$v = u+at,\ s = \frac{1}{2}(u+v)t,\ s = ut+\frac{1}{2}at^2,\ v^2 = u^2+2as$$

11.74 Use the equations in 11.73 to solve problems involving velocity, acceleration, deceleration and distance travelled by moving objects, eg vehicle, engineering component, freely falling body, projectile.

11.75 Define angular velocity, angular acceleration and their units.
Units: rad/s, rad/s^2

11.76 Derive the relationships between linear and angular motion.
Relationships: $v = \omega.r$, $a = \alpha.r$, $s = r.\theta$

11.77 Perform calculations involving the relationships in 11.76 and $\omega = 2.\pi.N$ where N is rev/s.

11.78 Obtain equations for uniformly accelerated angular motion by analogy with linear motion.
Equations:

$$\omega_2 = \omega_1+\alpha.t,\ \theta = \frac{1}{2}(\omega_1+\omega_2)t,\ \theta = \omega_1 t + \tfrac{1}{2}\alpha t^2,\ \omega_2{}^2 + 2.\alpha\theta$$

11.79 Solve problems involving angular motions using the equations in 11.78.

Dynamics

11.80 Explain the laws of dry friction.

11.81 Define the coefficient of friction.

11.82 Solve problems involving the force of friction and the coefficient of friction.

11.83 Solve problems involving the work done by a constant force.
Force: constant, inclined, uniformly varying

11.84 Derive the relationships for potential energy and linear kinetic energy.
Relationships:

$$P.E. = mgh,\ K.E. = \frac{1}{2}mv^2$$

11.85 Derive the relationships for work done (W) and power (P) transmitted by a torque (T).
Relationships:

$$W = T\theta,\ P = T\omega$$

11.86 Solve problems involving potential energy, kinetic energy, torque and power.

Simple machines

11.87 Explain the function of a machine and the term simple machine.

11.88 Define the terms velocity ratio (VR), mechanical advantage (MA) and efficiency and solve problems on a range of machines.
Machines: belt drives, gear trains, pulley blocks, screwjack, worm and wheel, winch

11.89 Describe the effects of friction in machines.
Effects: generation of heat, unwanted reduction in efficiency

11.90 Draw graphs of effort (E) against load (W) from experimental results on simple machines and obtain the law of the machine. E = aW + b. Show that the limiting value of efficiency is 1/aVR.

11.91 Explain the term overhauling and why simple lifting machines are designed to have an efficiency of less than 50%.

Heat

11.92 Define thermal conductivity and state that thermal resistance is the reciprocal of conductance.

11.93 Derive an expression for the heat conducted in terms of cross sectional area (A), length (l) of the conductor, temperature difference (T_2-T_1) and the coefficient of thermal conductivity (k).

$$Q = \frac{kA(T_2-T_1)}{l}$$

11.94 Solve simple problems related to heat transfer by conduction.

11.95 Explain Boyle's law and Charles' law.

11.96 Combine the laws in 11.95 to give the general gas law PV/T = a constant.

11.97 Solve problems relating to pressure, volume and temperature of gas.

Direct current electrical circuits

11.98 Explain Ohm's law and solve problems relating to voltage, current and resistance.

11.99 Identify from electrical circuit diagrams, series and parallel connections of resistors and in each case derive an expression for the equivalent resistance.

11.100 Solve problems involving series, parallel, and series-parallel circuits, limited to four resistors, and Ohm's law.

11.101 Define resistivity (ρ) of a conductor and the unit of resistivity and use the formula $R = \rho L/A$ to calculate the resistance of a conductor having length L and cross sectional area A.

11.102 Define temperature coefficient of resistance and its units, and calculate change in resistance due to a change in temperature.

11.103 State the formulae for power in an electrical circuit.
Formulae: $P = VI$, $P = I^2.R$ and $P = V^2/R$

11.104 Identify the heating effect of an electrical current, Electrical energy = Power x time, and state the units joules (watt-seconds) or the kWh (kilo-watt hour).

11.105 Solve problems relating to 11.103 and 11.104, involving calculations of power and energy in electrical circuits.

11.106 Identify the uses of cells and batteries, including primary, secondary, lead acid, nickel-iron and cadmium.
Uses: primary cells in portable equipment, secondary cells in rechargeable appliances and vehicles

Alternating current theory

11.107 Explain the term 'single phase alternating current' and sketch a graph of a periodic wave.

11.108 Define the terms associated with alternating current.
Terms: cycle, frequency, period, peak value, instantaneous value, average value and root mean square (rms) value

11.109 Solve problems involving conversion of voltage and current, peak average and rms values.

11.110 Define resistance, inductive reactance and capacitive reactance in ac circuits.

11.111 Deduce the relationships between ac voltage and current when a constant voltage is applied to pure components.
Components: resistance, inductance, capacitance

11.112 For each case in 11.111, sketch graphs of current and voltage against time and the corresponding phasor diagrams.

11.113 Draw to scale phasor diagrams representing alternating currents and voltages in a series circuit containing capacitance and resistance and inductance and resistance.

11.114 State that the power factor of the circuits in 11.113 is $\cos\phi$ where ϕ is the phase angle between the supply current and the voltage.

11.115 State that the true power in an ac circuit is given by $VI\cos\phi$, where $\cos\phi$, is the power factor.

11.116 Solve simple problems involving the calculation of power in ac circuits.

11.117 Explain the principle of operation of an ideal transformer and use the relationship

$$\frac{E_p}{E_s} = \frac{N_p}{N_s} = \frac{I_s}{I_p}$$ to solve simple problems.

Electrical machines

11.118 State the principle of electromagnetic induction and explain the operating principles of electric motors and generators.

11.119 Describe a three-phase ac supply and explain how it can generate a rotating magnetic field.

11.120 Describe the external characteristics and uses of series and shunt-wound dc motors.

11.121 Describe the external characteristics and uses of ac induction and synchronous motors.

11.122 Explain the need for specialised starter equipment and protection devices for electric motors.

Electrical measurements

11.123 Identify and describe the correct use of electrical and electronic test instruments for measuring electrical resistance, voltage, current, power and frequency.

11.124 Describe the principle of operation of a moving coil instrument and a repulsion type moving iron instrument.

11.125 State the meaning of resolution and accuracy as used to specify the performance of electrical test instruments.

11.126 Describe the causes of error which may arise from the use of electrical and electronic test instruments.
Cause of error: electrical loading, limitation of resolution and accuracy

11.127 Compare the specifications of analogue and digital instruments using manufacturers' data and calculate the accuracy which may be attributed to a variety of different electrical measurements.
Measurements: voltage, current and resistance including low and high scale values

Test specification for written paper Engineering Fundamentals 2 (2565-02-011)

This is a written examination paper lasting three hours with ten questions. Candidates must answer **all** 10 questions.

The examination paper will cover the knowledge specifications:

Topic	Approximate % examination weighting
Mathematics	
Statistics	12
Logarithms, algebra and graphs	12
Geometry and trigonometry	8
Calculus	8
Science	
Statics, stress and strain	10
Kinematics, dynamics and simple machines	15
Heat	5
dc electrical circuits	10
ac current theory	10
Electrical machine and electrical measurements	10

013 Computer Aided Draughting 1

Introduction

The aim of this unit is to introduce candidates to computer aided drafting packages. This syllabus is based on AutoCAD release 12 but other versions or software packages may be used provided the following competences can be met.

Practical competences

The candidate must be able to do the following:

13.1 Load computer aided drafting software from the operating system or graphical user interface (GUI).

13.2 Select commands for setting user environment.
Commands: drawing size, units, axis and system origin, grid, snap, line style, character font

13.3 Set and change system variables.
System variables: mode, size, limits

13.4 Enter points using absolute and relative and polar coordinates.

13.5 Select and use commands to create and edit entities.
Entities: point, line, circle, arc, ellipse, polyline and rectangle

13.6 Use various methods to edit existing drawings.
Methods: copy, move, rotate and erase entities, extend, trim, stretch, mirror, delete, break and scale existing drawing entities, fillets, chamfers, tangents

13.7 Enter and edit text in a drawing and use commands to create and name blocks and layers.

13.8 Use attributes to attach text to a block.

13.9 Produce drawings to a suitable scale and label and dimension in accordance with standards.
Drawings: two-dimensional (lines, circles, text, dimensions), sections, automatic dimensioning (linear, angular, radial)

13.10 Hatch and shade drawings to distinguish components and structures.

13.11 Show components using standard details.
Standard details: projection (first, third), cross-sections, cross-hatching

13.12 Produce a number of plots from a variety of different sized drawings to different scales.

013 Computer Aided Draughting 1

Practical assignment 013/1: Creating drawings

1 Competence references

13.1 – 13.12

2 Preparation

2.1 **Location of test**
The training centre, or other venue where supervision and appropriate working conditions are provided.

2.2 **Requirements**
A computer set up and running CAD software, a digitiser or mouse, an A4 pen plotter or laser printer able to produce A4 copy at 300 dpi. A drawing file as specified in section 2.4.

2.3 **Instructor notes**
The instructor must prepare a drawing file CG-BALAN in accordance with the specification given in section 2.4. This drawing file must be made available to each candidate either by copying it into the candidate's directory or onto a floppy disk.

The time allowed for this assignment is 4 hours. Candidates are to be given 10 minutes to read their papers and clarify any queries before starting the assignment.

After the assignment is completed, a hard copy of the drawing PARTS1 must be produced by the candidate. The instructor must ensure no further changes or additions are made to the drawing.

2.4 The instructor must create the drawing below to dimensions specified and save under the filename CG-BALAN. The drawing must be created as a block and stored on candidates' disks or appropriate directory.

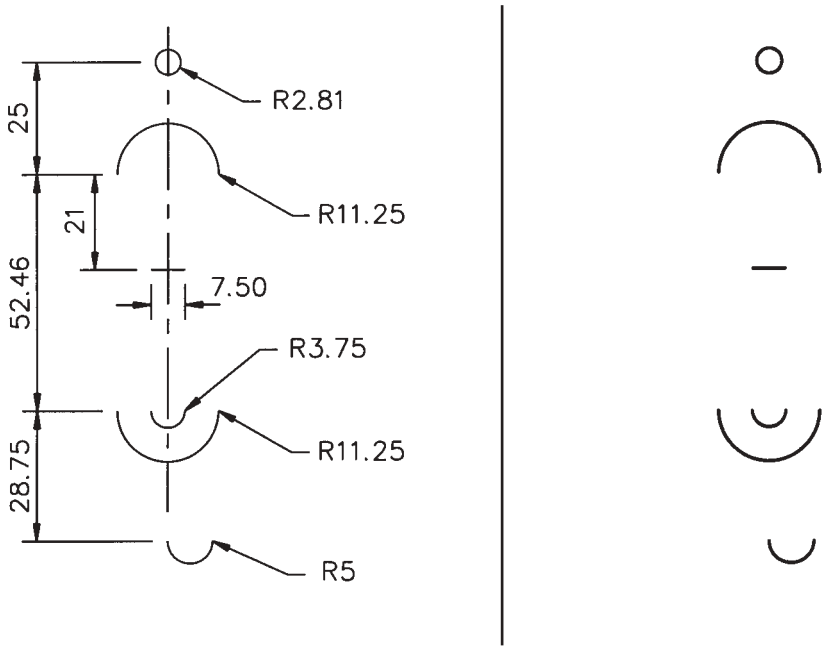

3 Candidates' instructions

3.1 This assignment must be completed within 4 hours. In this assignment you will be required to create several objects within a border, insert text and hatching and use layers. You will need a copy of the drawing file CG-BALAN either on floppy disk or in your user area.

3.2 Use CAD software to produce a drawing sheet layout with border and title block to the dimensions and coordinates shown below. Insert the text shown using the text heights specified.

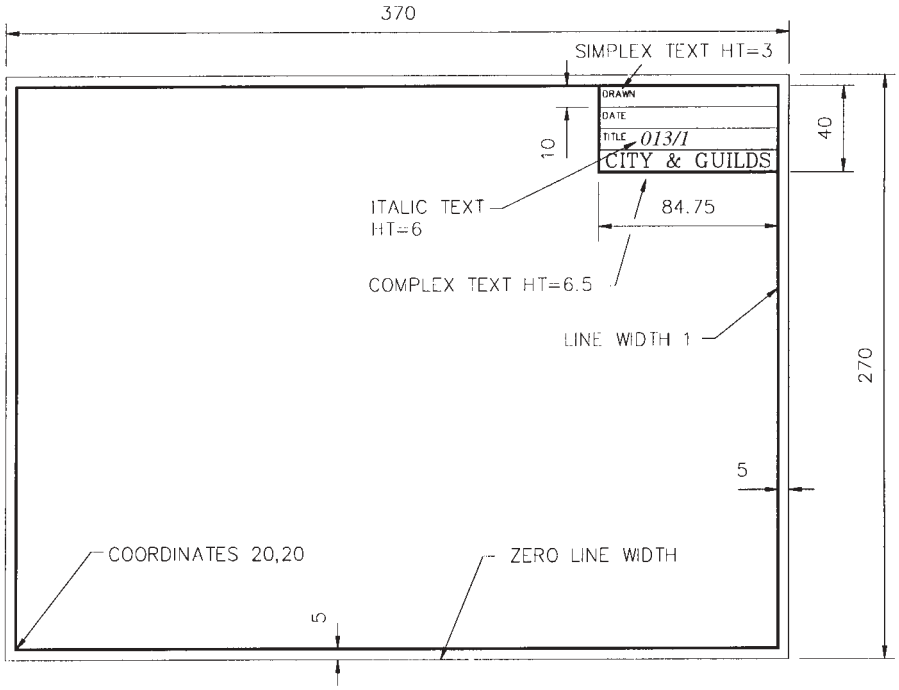

3.3 Set the drawing limits to 0,0 and 400,300.

3.4 Create layers called HATCH and TITLE allocating different colours to all layers. Change all current entities on the drawing to the layer called TITLE.

3.5 Zoom in on the title block to produce the enlarged view similar to that shown and insert your name and today's date using suitable text heights. These text items must also be placed on the layer called TITLE.

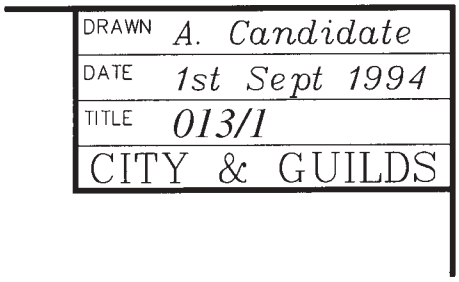

Isometric shaft

3.6 Draw the isometric shaft shown below to the coordinates and dimensions given.

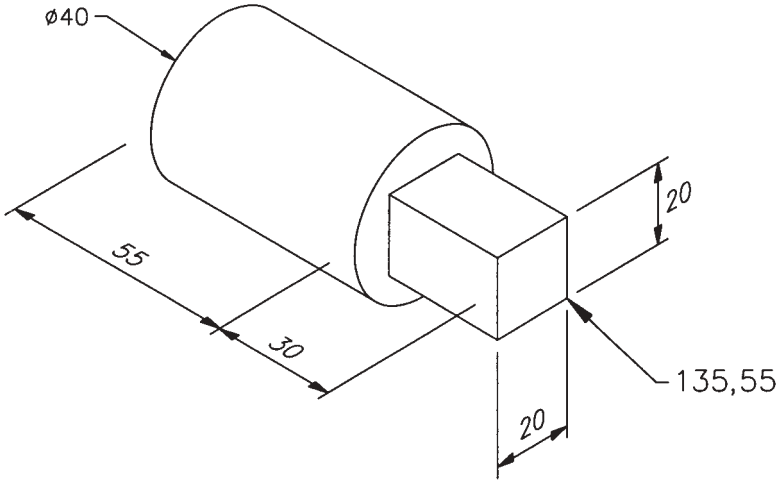

Belt drive

3.7 Draw the belt drive shown below to the coordinates and dimensions given.

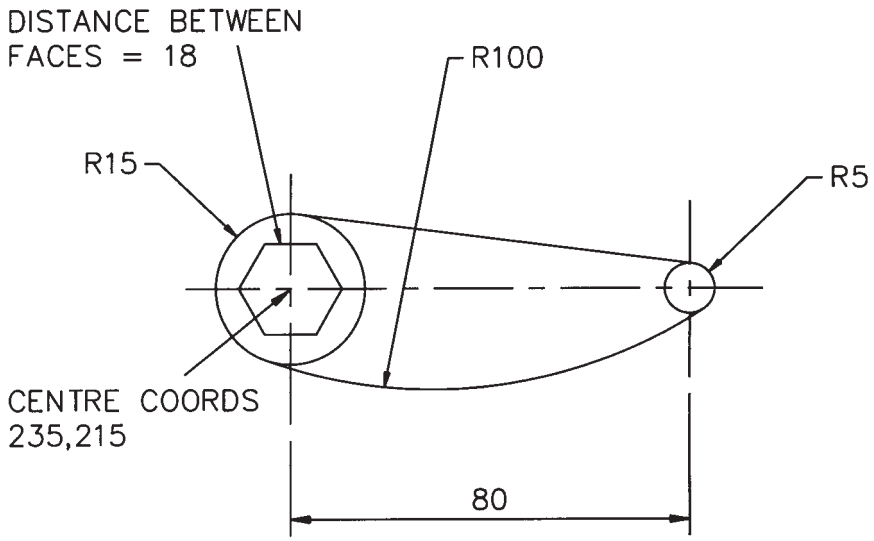

3.8 Ensure the angles of the hexagon are identical.

3.9 Select and use an appropriate linetype for the centrelines.

Hub

3.10 Use appropriate drawing and editing commands to create the HUB detailed below to the coordinates and dimensions given.

3.11 Select and use appropriate hatch patterns and insert them on the layer named HATCH.

3.12 Select and use an appropriate linetype for the centrelines.

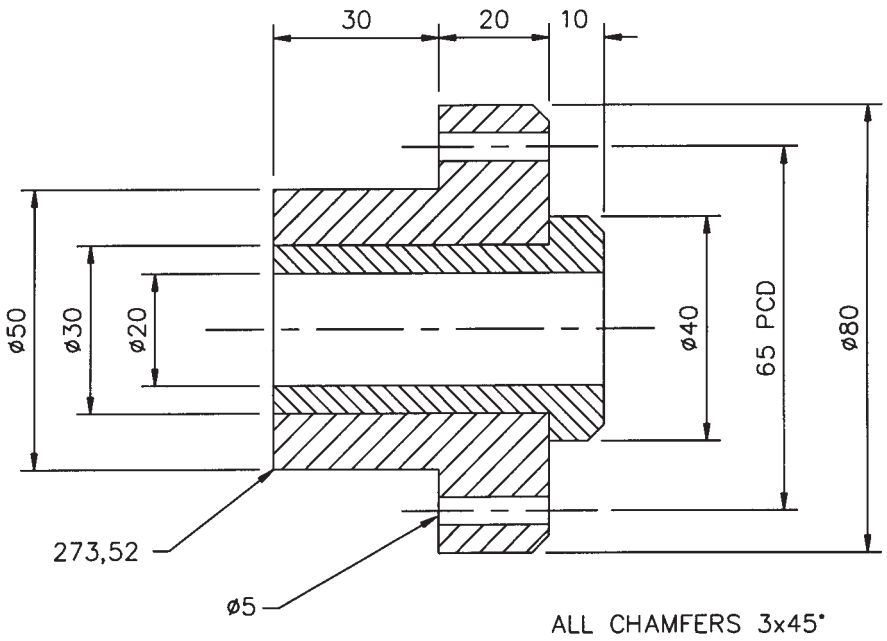

Balance

3.13 Insert the drawing CG-BALAN provided as a block with the same scale and orientation as the original block.

3.14 Complete the drawing, adding lines and a circle in accordance with the detail shown below.

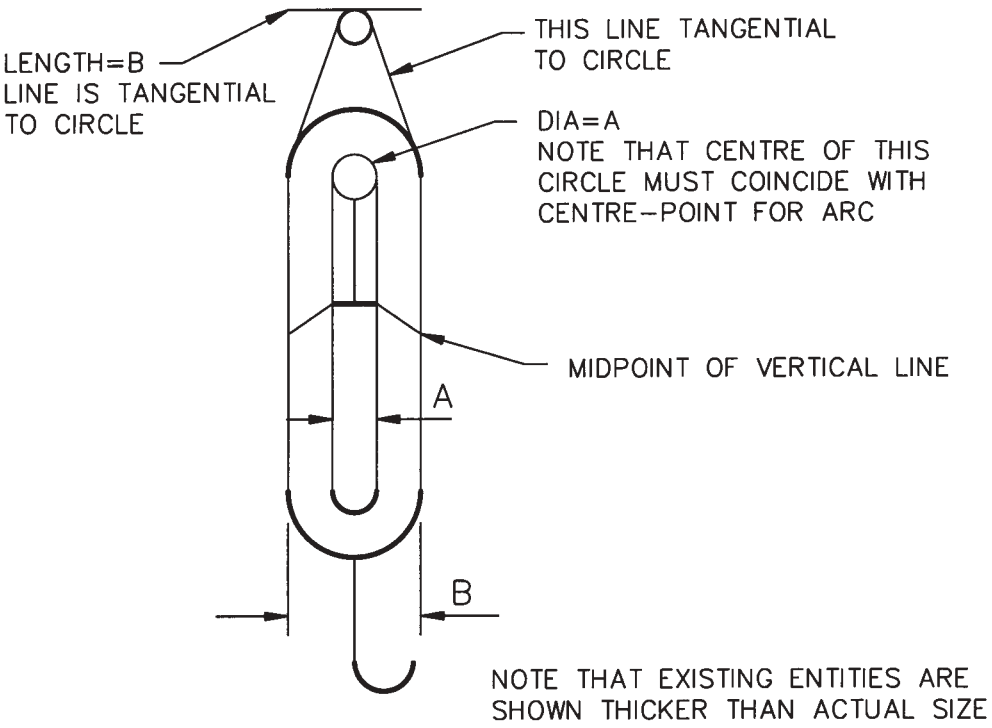

3.15 Save the drawing using the filename PARTS1.

3.16 Plot your final drawing as hard copy to a suitable scale on A4 or larger size sheet.

3.17 Put your name on your work and hand it to your instructor.

4 Marking

4.1	Completed within 4 hours.	( )
4.2	Drawing layout with border and title created correctly.	[ ]
4.3	Drawing limits set as specified.	( )
4.4	Layers named HATCH and TITLE created. All hatching placed on layer HATCH. TITLE layer contains title block, border and associated text.	[ ]
4.5	Text styles correct and text positioned neatly in title block.	( )
4.6	All entities of the isometric shaft present and drawn to correct size.	( )
4.7	All entities of belt drive present and drawn to correct size.	[ ]
4.8	The angles of the hexagon are identical.	( )
4.9	Correct linetype used for centrelines.	( )
4.10	All entities of the hub present and drawn to correct size.	( )
4.11	Appropriate hatch patterns inserted on the HATCH layer.	( )
4.12	Correct linetype used for centrelines.	( )
4.13	CG_BALAN inserted as a block with same scale and orientation as the original block.	[ ]
4.14	Drawing correctly completed.	[ ]
4.15	Drawing saved as PARTS1.	[ ]
4.16	Drawing printed out.	[ ]
4.17	Work handed in to instructor.	[ ]

5 Assignment completion

The candidate will have satisfactorily completed this assignment if success is recorded in ALL items marked with a [ ] and at least 6 items marked with a ( ).

A period of at least seven days must elapse before an unsuccessful candidate may retake this assignment.

Practical assignment 013/2: Editing, dimensioning and use of blocks

1 Competence references

13.1 – 13.12

2 Preparation

2.1 **Location of test**
The training centre, or other venue where supervision and appropriate working conditions are provided.

2.2 **Requirements**
A computer set up and running CAD software, a digitiser or mouse, an A4 pen plotter or laser printer able to produce A4 copy at 300 dpi.

Two drawing files DWG1 and DWG2 either on floppy disk on in user directory.

Copy of section 6.

2.3 **Instructor notes**
The instructor must prepare two drawing files DWG1 and DWG2 precisely in accordance with the specifications given in sections 2.4 and 2.5. The limits of each drawing should be set to 210,297. With the exception of one dimension on DWG2, the detailed dimensioning information is NOT required on these drawings. These drawing files must be made available to each candidate either by copying into the candidate's network directory or onto floppy disk.

The time allowed for this assignment is 4 hours. Candidates are to be given 10 minutes to read their papers and clarify any queries before starting the assignment.

After the assignment is completed, a hard copy of the drawings must be produced by the candidate for marking purposes. The instructor must ensure no further changes or additions are made to the drawings.

2.4 Instructor drawing instructions for DWG1

Drawing 2 must be converted to a block and inserted as shown.

Ensure that UNITS are set to decimal with zero decimal places.

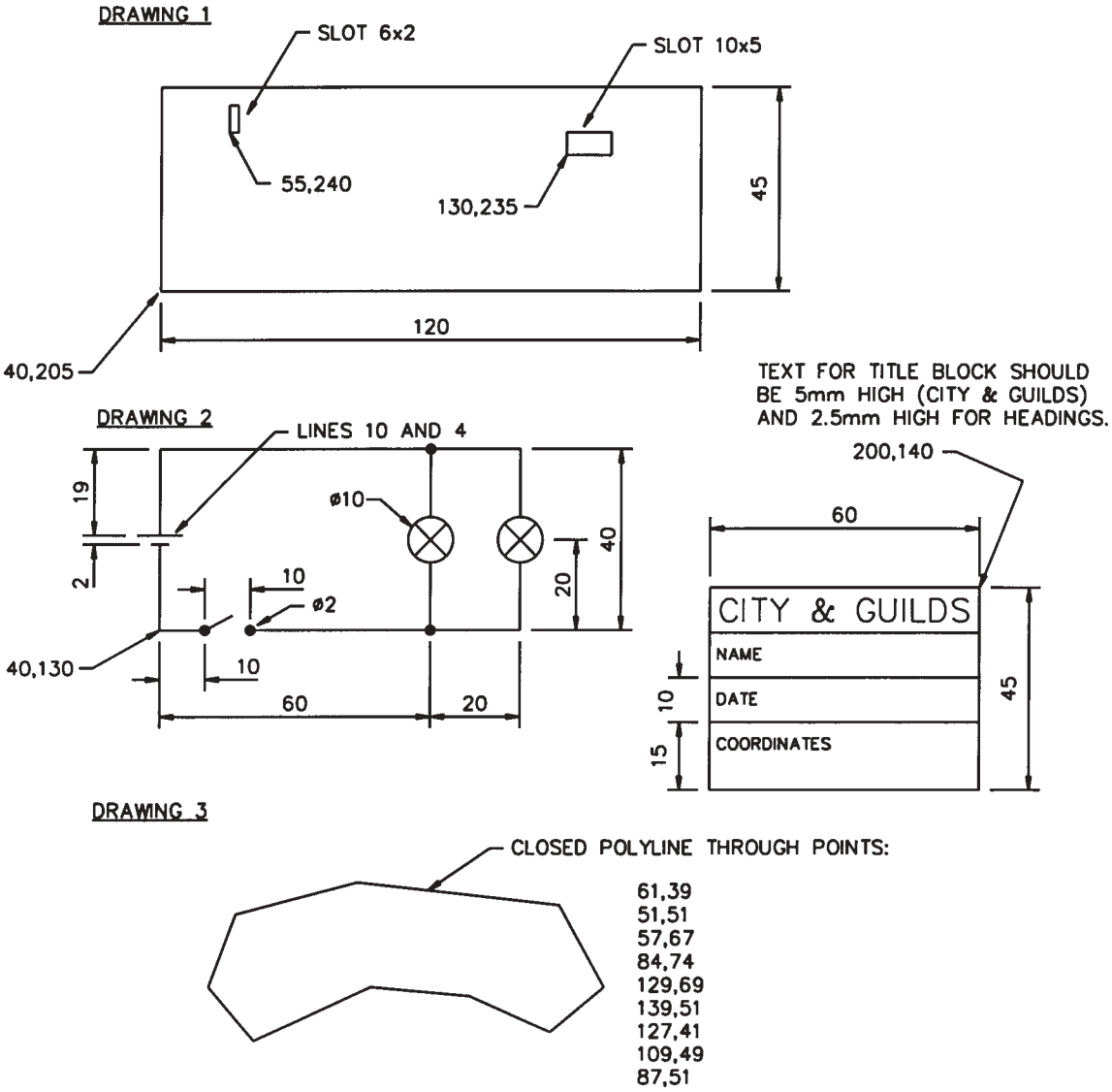

2.5 Instructor drawing instructions for DWG2

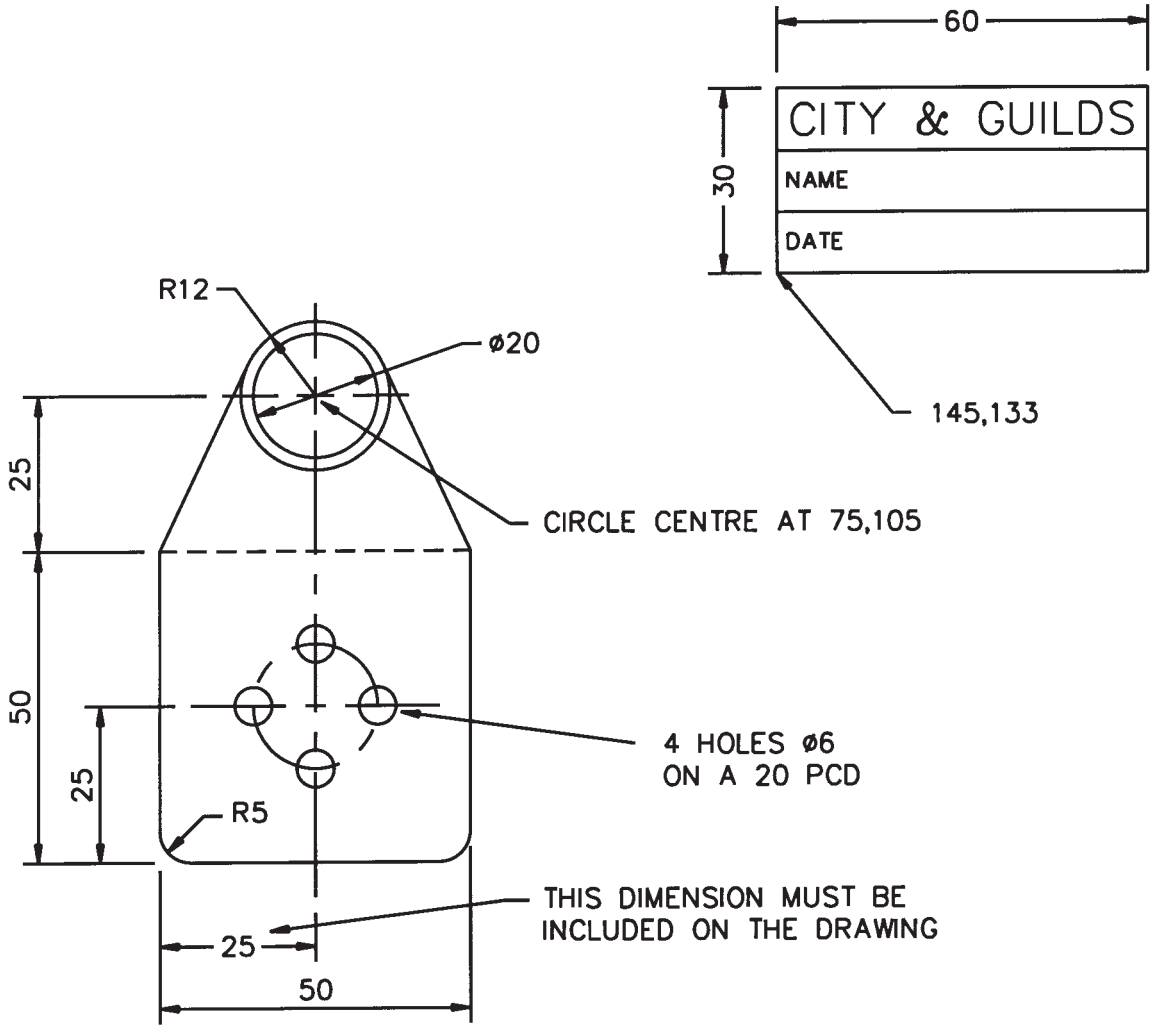

Ensure that UNITS are set to decimal with zero decimal places, dimensioning is set to associative, and the UCS icon is visible.

This drawing file should have a current text style called TITLE which uses the simplex font with height = 0 and another (unused) textstyle called SURPLUS.

3 Candidates' instructions

3.1 This assignment is in two parts and both parts must be completed within 4 hours. You will need a copy of section 6 and two drawing files DWG1 and DWG2 either on floppy disk on in your user area.

Part one:

Load drawing DWG1 in preparation for editing. The drawing should appear on screen as shown in section 6.1. You are required to edit this drawing to produce the drawing shown in section 6.2. The instructions for editing are given below.

Drawing 1

3.2 The drawing provided represents a rectangular sheet of metal with two small rectangular slots. At the left side of the sheet create five more identical slots arranged symmetrically around a central point, then produce two more identical patterns of slots, as shown below. At the right-hand side, create three more slots, arranged symmetrically under the first slot as shown.

As supplied

After editing

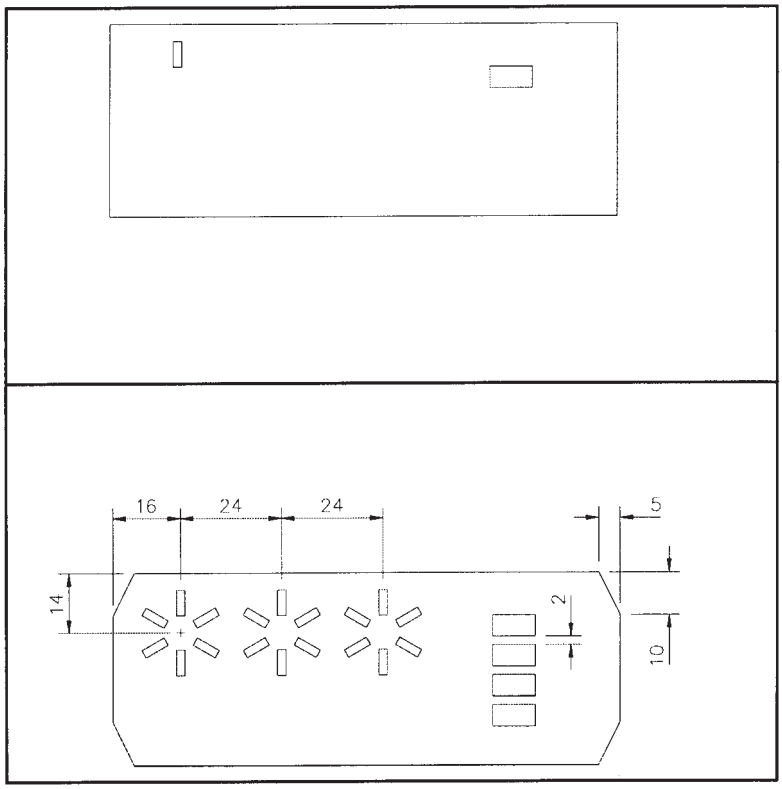

Complete the editing of this drawing to produce the final version as shown.

Drawing 2

3.3 Note that this object has been created as a block. Edit the drawing as required, adding the extra features and adjusting the distances between them as shown below.

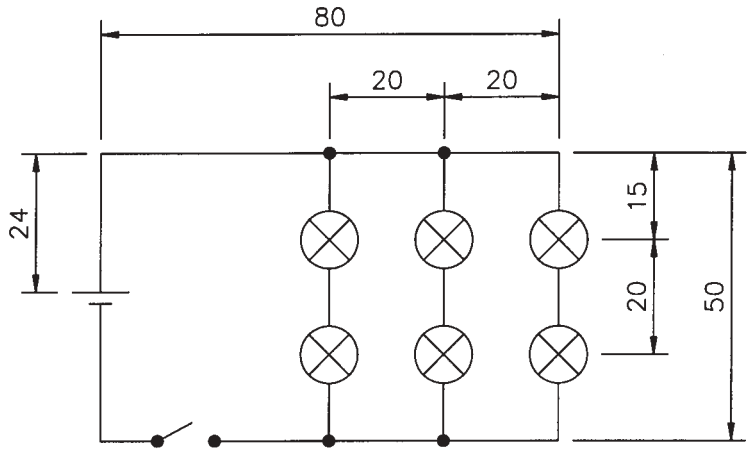

Drawing 3

3.4 Fit a spline curve to the polyline as shown in stage 1.

3.5 Scale the object to 1.25 the original size using the point indicated as a reference.

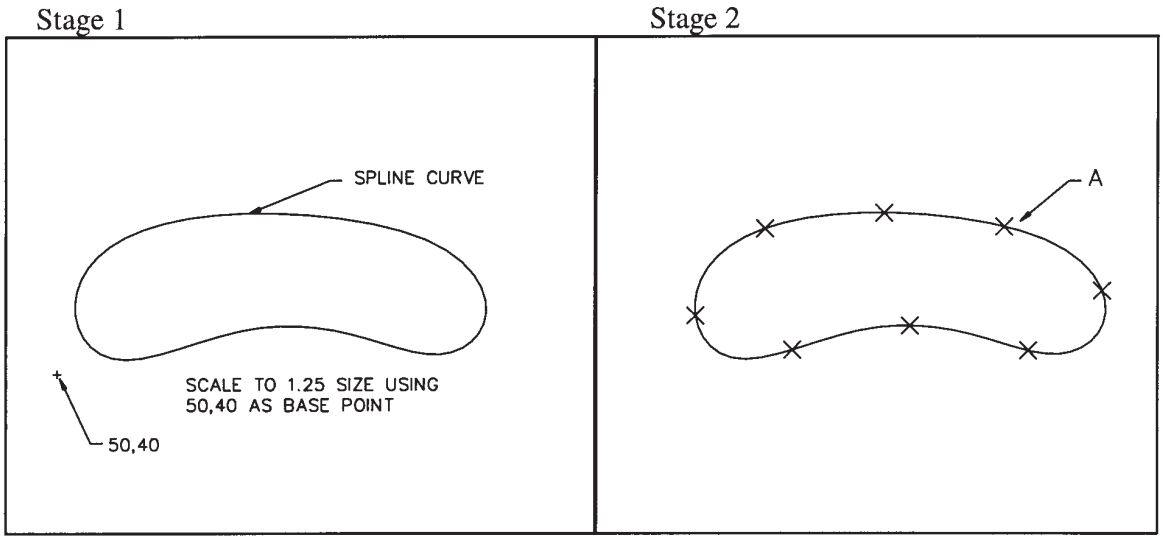

3.6 Edit the outline placing a series of equally spaced points as shown in stage 2. Determine the coordinates for the point labelled A (to two decimal places) and enter this in the box provided.

3.7 Enter your name and today's date in the box provided.

3.8 Save the drawing using the name DWG3.

Part Two:

Load drawing DWG2 in preparation for editing. The drawing should appear on screen as shown in section 6.3. You are required to edit this drawing to produce the drawing shown in para. 6.4 by inserting dimensions and by creating and inserting blocks. The instructions for editing are given below.

Machine-tool layout diagram

3.9 In the space available on drawing DWG2, you are required to produce the layout shown in para. 6.4. This drawing is to be produced using two blocks called MC and TC. Draw the outline for the blocks as shown below.

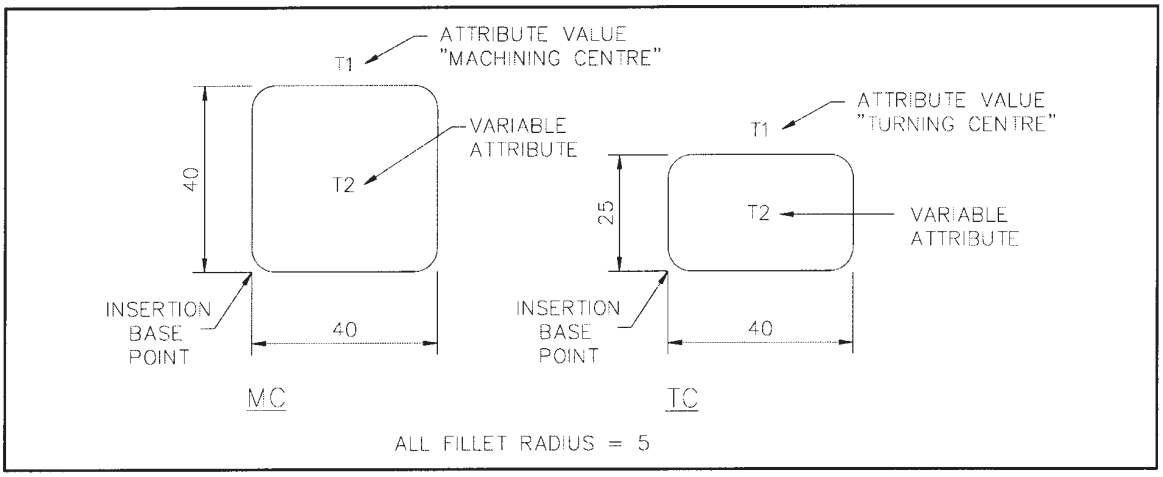

3.10 Create the blocks: Both have one constant attribute giving the value 'MACHINING CENTRE' and 'TURNING CENTRE', respectively. They also have one variable attribute to indicate the type of machine tool. Use appropriate tag names, a text height of 2.5 and position the text for the attributes similar to that shown. Fix the insertion points for the blocks at their bottom left-corner, as shown.

3.11 Save the blocks as separate files using the names MC and TC so that they may be used in other drawings if required.

3.12 Set the system to allow attribute entry by dialogue box.

3.13 Insert the blocks in the drawing to the coordinates given below.

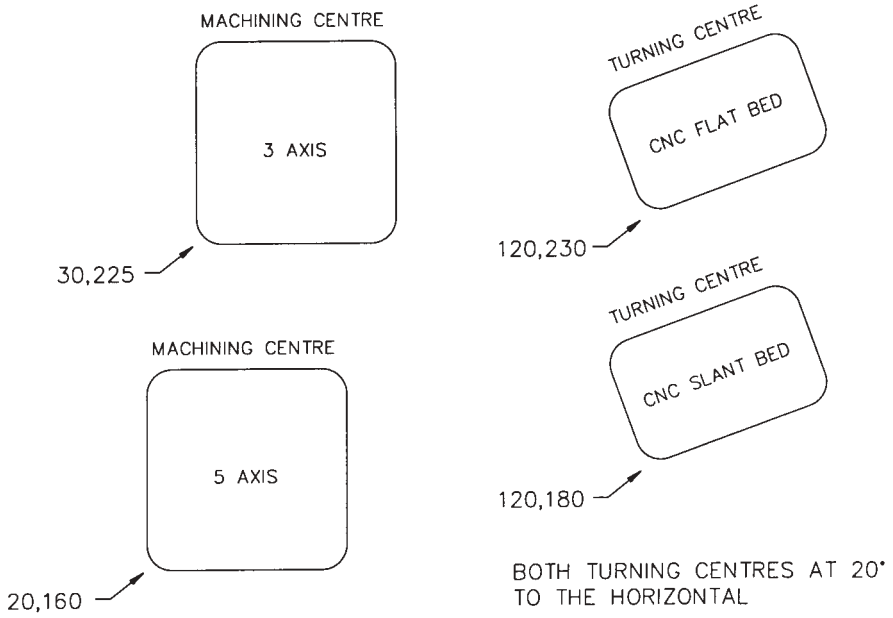

Dimensioned drawing

3.14 You are required to dimension the drawing so that it appears as shown in the target drawing (section 6.4) and meets the following requirements:

3.14.1 the dimension text is placed above the dimension line

3.14.2 the dimension text aligns with the dimension line

3.14.3 the dimensions are to two decimal places

3.14.4 all dimensions are associative

3.14.5 dimensions do not overlap each other

3.14.6 the 20 nominal diameter hole has a plus/minus tolerance of 0.5 inserted as shown

3.14.7 leader notes are inserted correctly.

3.15 Convert the dashed line to a solid line.

3.16 Rename the linetype currently called HIDDEN as SPECIAL.

3.17 Remove the unused text style called SURPLUS.

3.18 Insert your name and the date in the box provided and save the drawing using the name DWG4.

3.19 Plot your final drawings as hard copy to a suitable scale on A4 sheet and hand in your work to the instructor.

4 Marking

Marking must be carried out on the electronic files DWG3 and DWG4.

4.1 Completed within 4 hours. [ ]

DWG3 – Drawing 1

4.2 All drawing entities present and drawn to the correct size, equispaced at the correct orientation and position. Corners correctly chamfered. [ ]

DWG3 – Drawing 2

4.3 Block exploded and drawing stretched to adjust position of different features.
Extra features added. [ ]

DWG3 – Drawing 3

4.4 Spline Curve fitted to polyline. [ ]

4.5 Drawing correctly scaled to given reference point. [ ]

4.6 Points correctly placed around polyline using appropriate point style and correct coordinate values (to two decimal places) for point A entered in box. [ ]

4.7 Title box completed with candidate's name and date. [ ]

4.8 Drawing saved as specified. [ ]

DWG4 – Machine layout

4.9 Both blocks drawn to the correct size. [ ]

4.10 Each block has the correct constant and variable attributes and appropriate text size and position used for attributes Insertion base point correct. [ ]

4.11 Both blocks created and saved on the disk. [ ]

4.12 ATTDIA system variable set to 1. ( )

4.13 Correct blocks inserted in specified positions, with correct orientation and attribute values. [ ]

DWG4 – Dimensioned drawing

4.14 All dimensions present and with the correct value. [ ]

4.14.1 Dimension text placed above dimension lines. [ ]

4.14.2 Dimensions aligned with dimension lines. ( )

4.14.3 Dimensions given to two decimal places. [ ]

4.14.4 All dimensions are associative. ( )

4.14.5 Dimensions neatly positioned and not overlapping other dimensions. ( )

4.14.6 Hole tolerance inserted as specified. [ ]

4.14.7 Leader notes correct. ( )

4.15 Dashed line on object converted to a solid line. [ ]

4.16 Line type correctly renamed. ( )

4.17 Unused text style removed. ( )

4.18 Name and date inserted in box, drawing saved as specified. [ ]

4.19 Hard copies produced and handed to instructor. [ ]

5 Assignment completion

The candidate will have satisfactorily completed this assignment if success is recorded in ALL items marked with a [ ].

A period of at least seven days must elapse before an unsuccessful candidate may retake this assignment.

6 Assignment documentation

6.1 Drawing DWG1 as provided to candidates

DRAWING 1

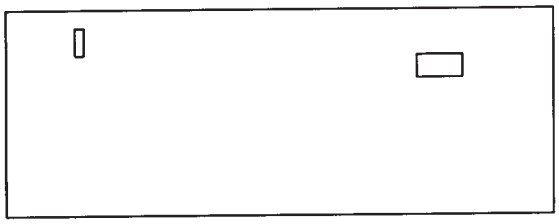

DRAWING 2

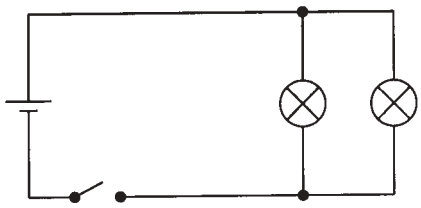

CITY & GUILDS
NAME
DATE
COORDINATES

DRAWING 3

6.2 Target drawing DWG3

DRAWING 1

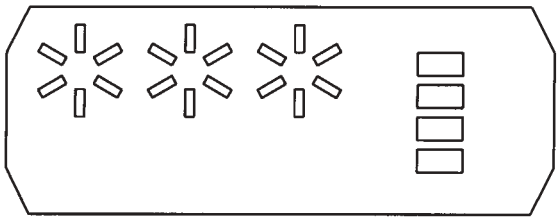

DRAWING 2

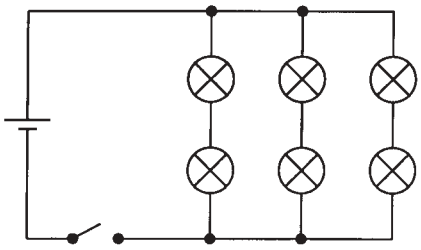

CITY & GUILDS
NAME
DATE
COORDINATES

DRAWING 3

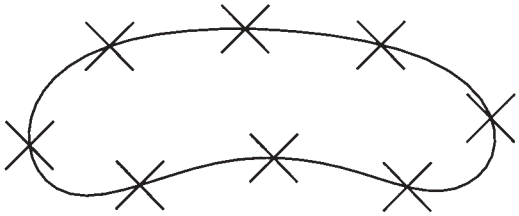

6.3 Drawing DWG2 as provided to candidates

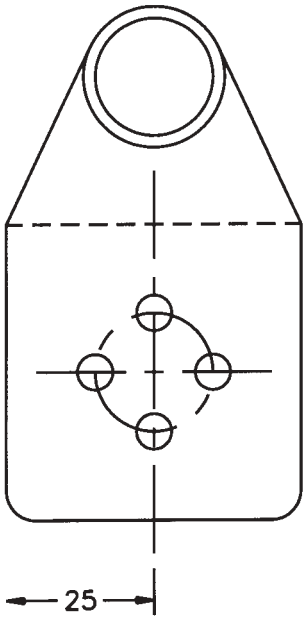

CITY & GUILDS
NAME
DATE

6.4 Target drawing DWG4

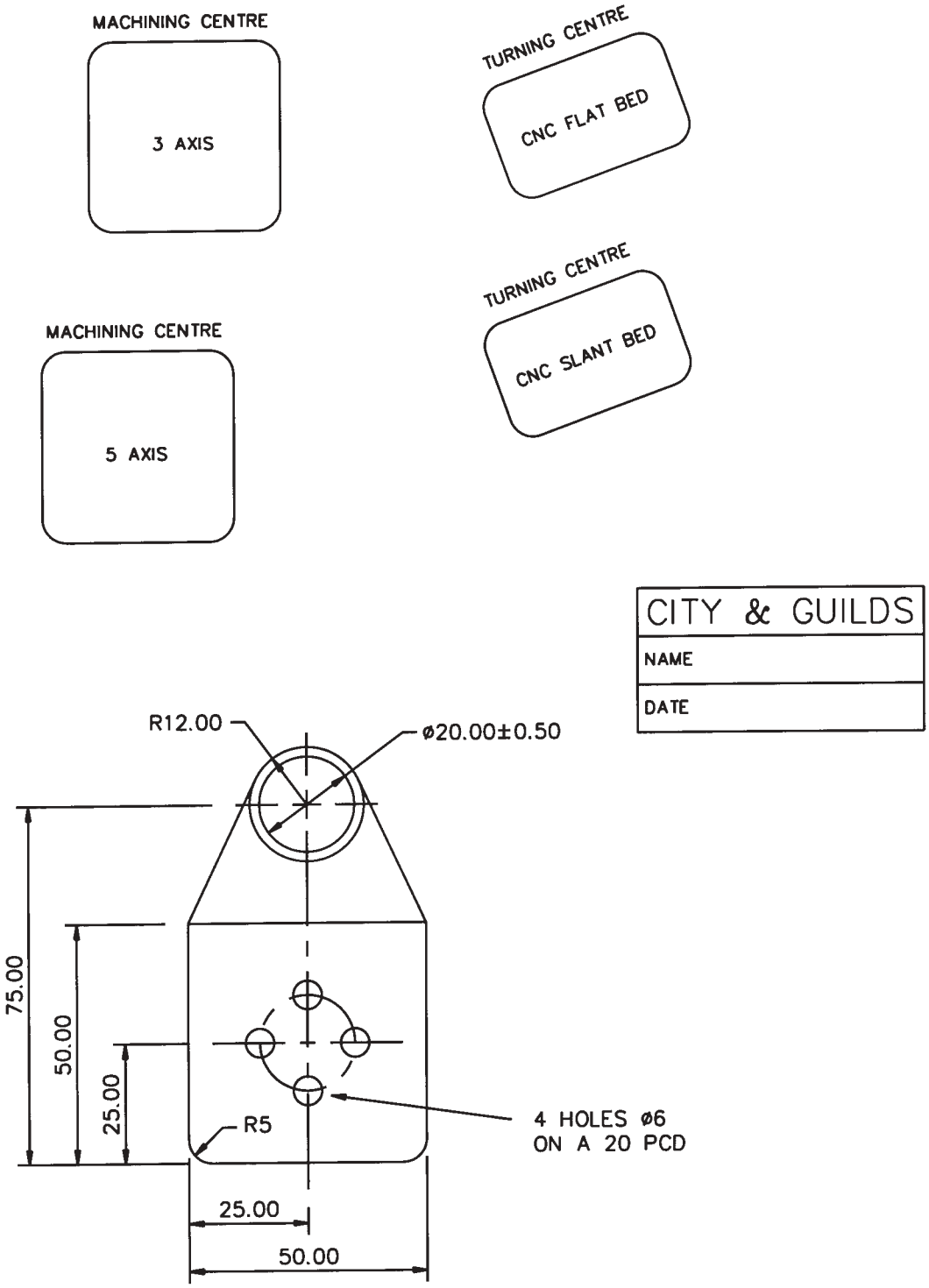

014 Engineering Drawing

Introduction

This practical drawing unit is designed to build on the skills and knowledge gained in the Certificate. The emphasis of the teaching should be on the interpretation and production of drawings related to engineering component and assemblies following British or International Standard recommendations. Candidates need to become familiar with the application of these standards, regarding them as reference documents to be used when required. It is not necessary for the exact format of representations and symbols to be committed to memory.

Practical competences

Pictorial projections

14.1 Draw pictorial projections of components and pipe work assemblies.
Projections: oblique, isometric (without the use of isometric scales), freehand (using isometric grid paper)
Components of: engines, compressors, pumps, valves, transmissions, machine tools
Component features: surfaces (flat, angular and curved), shapes (cylindrical and conical)

Orthographic projections

14.2 Make freehand sketches of simple components using square grid paper, to demonstrate first and third angle projection.

14.3 Produce detail drawings of components in first OR third angle projection that comply with the recommendations of BS308 (Parts 1 and 2) or the equivalent international (eg International Standards Organization [ISO]) standard.
Components of: engines, compressors, pumps, valves, transmissions, machine tools
Detail drawing (dimensioning): using general conventions, arrangement, methods, common features, tolerancing
Recommendations: title block, hidden detail, sectional views, auxiliary views, symbols and abbreviations, conventional representations

14.4 Select appropriate tolerances from BS4500 (Parts 1 and 2) or the equivalent international (eg ISO) standards for shafts and holes to suit specified types of fit, and apply these directly or in the form of limits to dimensions.
Types of fit: clearance, transition, interference

14.5 Tolerance characteristics on details drawings in accordance with BS308 Part 3 or equivalent international (eg ISO) standards.
Characteristics: straightness, flatness, roundness, cylindricity, profile of a line, profile of a surface, parallelism, squareness, angularity, position, concentricity, symmetry, run-out

14.6 Use detail drawings of parts and assembly instructions to produce assembly drawings in first OR third angle projection that comply with the recommendations of BS308 Part 1 or the equivalent international standard (eg ISO).
Assemblies/sub-assemblies (maximum fifteen parts): engines, compressors, pumps, valves, transmissions, machine tools
Assembly drawings: dimensions and instructions to effect assembly, parts list
Recommendations: title block, item (balloon) references, sectional views, conventional representations

14.7 Select suitable materials for components using information sources.
Materials: metals (ferrous, non-ferrous), polymers
Components: engine, compressor, pump, valve, transmission, machine tool
Sources: textbooks, catalogues, standards (BS/ISO), data sheets, computer data base

14.8 Produce drawings of welded joints (as used on fabricated components) to show the application of the welding symbols recommended in BS499 or the equivalent international (eg ISO) standard.
Joints: butt, fillet, lap

Circuit diagrams

14.9 Produce simple circuit diagrams to represent installations using the symbols recommended in the relevant British standard or equivalent international standard (eg ISO).
Installations: eg electrical and electronic (BS3939), piping and steam plant (BS1553), hydraulic and pneumatic (BS2917), instrument (BS1646)

Loci and cam

14.10 Plot common loci curves.
Curves: cycloid, involute, helix, spiral

14.11 Plot loci of points on simple mechanisms.
Mechanisms: slider crank, four bar chain, combined four bar chain and slider crank, quick return

14.12 Construct cam profiles for a variety of followers and displacement motions.
Cams: wedge, disc, face, cylinder, end
Followers: knife edge, flat, roller, radial arm, inline, offset
Motion: dwell, uniform velocity, uniform acceleration and retardation, simple harmonic motion

Interpenetration of surfaces and developments

14.13 Construct curves for insecting geometrical solids where the axis is at any angle in the same plane or along parallel planes.
Solids: cones, right and oblique cones, pyramids, cylinders, prisms, spheres

14.14 Produce pattern drawings for fabricated components using standard methods.
Methods: parallel line development, radial line development, triangulation

Practical assignment 014/1: Detail drawing of a component

1 Competence references

14.3, 14.4, 14.5, 14.7

2 Preparation

2.1 **Location of test**
The training centre or other venue where supervision and appropriate working conditions will be provided.

2.2 **Requirements**
Draughting machine or drawing board and tee square, drawing instruments, plain A2 drawing paper and 5mm or 10mm square grid paper.

Access to BS308 and Data Sheet BS4500A or the equivalent ISO standards.

Workshop measuring instruments.

Range of components
Typically: Lathe tail stock body
Lathe travelling steady (body)
Connecting rod
Shaft support bracket to accommodate a bush bearing

2.3 **Instructor notes**
Candidates are required to select a component, measure all aspects of the component and produce dimensional freehand orthographic sketches. Draw 3 views of the component using either first or third angle projection and add all the necessary information required to completely define the component. They must then produce a drawing of the component in accordance with the recommendation of BS308 or the equivalent ISO standard, and must include an appropriate title block.

Candidates have 8 hours to complete this assignment.

3 Candidates' instructions

3.1 The time allowed for this assignment is 8 hours. You are advised to read all the instructions before starting work.

3.2 Select one of the available components.

3.3 Measure all aspects of the component.

3.4 Using the square grid paper produce dimensioned freehand orthographic sketches.

3.5 Produce a drawing sheet with a layout which includes an appropriate title block.

3.6 Draw full size or to an appropriate scale in either first or third angle projection three views of the component, one of which must be a sectional view.

3.7 The drawing must be in accordance with the recommendations of BS308 or the equivalent ISO standards.

3.8 Ensure the drawing takes the following aspects into account:

3.8.1 positioning of the views

3.8.2 accuracy

3.8.3 correct projection

3.8.4 projection symbol

3.8.5 correct interpretation of the sectional view

3.8.6 dimensioning

3.8.7 linear tolerancing

3.8.8 geometric tolerancing

3.8.9 machining symbols

3.8.10 material

3.8.11 quality of the drawing.

3.9 Ensure your name is on your work and hand it to your instructor.

4 Marking

4.1	Assignment completed in 8 hours.	( )
4.2	Component selected.	[ ]
4.3	Measurements taken.	[ ]
4.4	Dimensioned freehand orthographic sketches produced on square grid paper.	[ ]
4.5	Drawing sheet layout which includes an appropriate title block.	( )
4.6	Three views of the component, including a sectional view, drawn full size or to an appropriate scale in either first or third angle projection.	[ ]
4.7	Drawing produced in accordance with the recommendations of BS308 or the equivalent ISO standard.	[ ]
4.8	Drawing produced taking the following aspects into account:	
4.8.1	positioning of the views	( )
4.8.2	accuracy of the drawing	[ ]
4.8.3	correct projection	[ ]
4.8.4	projection symbol	( )
4.8.5	correct interpretation of the sectional view	[ ]
4.8.6	dimensioning	[ ]
4.8.7	linear tolerancing	[ ]
4.8.8	geometric tolerancing	[ ]
4.8.9	machining symbols	[ ]
4.8.10	material	[ ]
4.8.11	quality of the drawing.	[ ]
4.9	Work handed to the instructor.	[ ]

5 Assignment completion

The candidate will have satisfactorily completed this assignment if successful in all items marked with a [ ] and 2 marked with a ( ).

A period of seven days must elapse before an unsuccessful candidate may retake this assignment. Candidates will be required to select a different component.

Practical assignment 014/2: Assembly drawing of a machine vice

1 Competence references

14.6, 14.7

2 Preparation

2.1 **Location of test**
The training centre or other venue where supervision and appropriate working conditions will be provided.

2.2 **Requirements**
Draughting machine or drawing board and the square, drawing instruments and A2 drawing paper.

Access to BS308 or equivalent ISO standard.

Copy of section 6.

2.3 **Instructor notes**
Candidates are required to draw three views of an assembled machine vice using either first of third angle projection. The drawing must be in accordance with the recommendations of BS308 or the equivalent ISO standard, and must include an appropriate title block and parts list.

Candidates have 8 hours to complete this assignment.

3 Candidates' instructions

3.1 The time allowed for this assignment is 8 hours. you are advised to read all the instructions before starting work. The dimensions shown in section 6 are in millimetres.

Section 6 shows the detail components of a machine vice drawn in first angle projection. The vice is assembled as follows:

The jaw plates are placed in the 4mm deep vertical recesses of the sliding and fixed jaws and held in place using M6 countersunk head screws (not shown). The sliding jaw is located in the 26mm wide slot in the base and secured by attaching the securing plate to its underside, using M6 countersunk head screws (not shown). The trapezoidal thread on the screw is engaged with that in the hole in the front end of the base and rotated until the thread protrudes beyond the end of the hole. The collar is placed over the 12mm diameter end of the screw so that its slotted end is adjacent to the trapezoidal thread, and the slotted washer is placed in the 4mm wide groove in the screw. The sliding jaw is then positioned to enable the left-hand M20 thread on the collar to engage with that in the jaw, and the collar screwed into the jaw so that its end is flush with the face of the jaw. Finally the handle is located in the 8mm diameter hole in the end of the screw and secured using the end cap.

3.2 Produce a drawing sheet with a layout which includes an appropriate title block and parts list.

3.3 Draw full size in either first or third angle projection the following views of the assembled vice with the jaws positioned 20mm apart:

3.3.1 a sectional view taken through A – A

3.3.2 a view in the direction of arrow B

3.3.3 a plan view.

3.4 The drawing must be in accordance with the recommendations of BS308 or the equivalent ISO standard.

3.5 Item reference (balloon reference) the assembly.

3.6 Ensure the drawing takes the following aspects into account:

3.6.1 positioning of the views

3.6.2 accuracy

3.6.3 correct projection

3.6.4 projection symbol

3.6.5 correct interpretation of the sectional view

3.6.6 name of a suitable material for each component

3.6.7 quality of the drawing.

3.7 Ensure your name is on your work and hand it into your instructor.

4 Marking

4.1	Assignment completed in 8 hours.	( )
4.2	Drawing sheet with a layout which includes an appropriate title block and parts list.	[ ]
4.3	The following views of the assembled vice, with the jaws positioned 20mm apart, drawn full size in either first of third angle projection:	
4.3.1	a sectional view taken through A – A	[ ]
4.3.2	a view in the direction of arrow B	[ ]
4.3.3	a plan view.	( )
4.4	Drawing produced in accordance with the recommendations of BS308 or the equivalent ISO standard.	[ ]
4.5	The assembly item referenced (balloon referenced).	( )
4.6	The drawing produced took the following aspects into account:	
4.6.1	positioning of the views	( )
4.6.2	accuracy	[ ]
4.6.3	correct position	[ ]
4.6.4	projection symbol	( )
4.6.5	correct interpretation of the sectional view	[ ]
4.6.6	name of a suitable material for each component	[ ]
4.6.7	quality of the drawing.	[ ]
4.7	Work handed in to the instructor.	[ ]

5 Assignment completion

The candidate will have satisfactorily completed this assignment if successful in all the items marked with a [ ] and 3 with a ( ).

A period of seven days must elapse before an unsuccessful candidate may retake this assignment.

6 Assignment documentation

6.1 Detail components of a machine vice

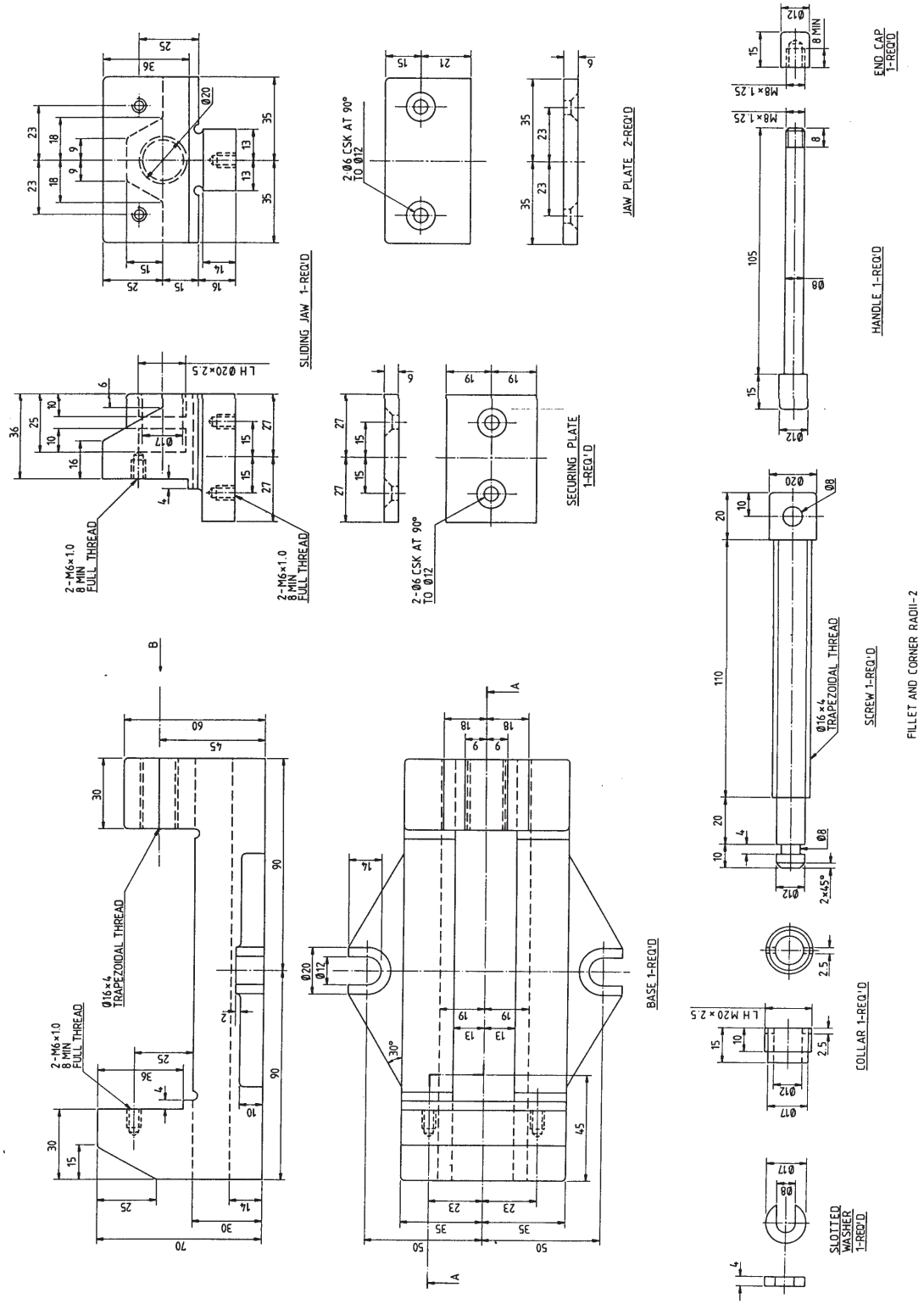

Practical assignment 014/3: Loci of standard motions

1 Competence references

14.10, 14.11

2 Preparation

2.1 **Location of the test**
The training centre or other venue where supervision and appropriate working conditions will be provided.

2.2 **Requirements**
Drafting machine or drawing board and Tee square, drawing instruments and A3 drawing paper.

Copy of section 6.

2.3 **Instructor notes**
Candidates are required to construct loci of standard mechanical movements from those shown in section 6.

Candidates have 4 hours to complete this assignment.

3 Candidates' instructions

3.1 You have 4 hours to complete this assignment. You are required to construct all 6 drawings from section 6.

3.2 Produce drawing sheet layout with appropriate border and title block.

3.3 Produce drawing to BS308 or equivalent standard.

3.4 3.4.1 Draw full size the basic geometry for the curve mechanism or spring.

3.4.2 Determine the positions required to produce the locus.

3.4.3 Draw smooth curve to represent the locus.

3.5 Ensure that all construction lines are shown.

3.6 Ensure your name is on your work and hand it in to the instructor.

4 Marking

4.1 Assignment completed in 4 hours. ( )

4.2 Drawing sheet layout with title and block produced. ( )

4.3 Drawing produced to BS308 or equivalent ISO standard. ( )

4.4 Six loci problems constructed:

4.4.1 full-size drawing produced [ ]

4.4.2 12 positions correctly determined [ ]

4.4.3 smooth curve drawn. [ ]

4.5 All construction lines shown. [ ]

4.6 Work handed in to the instructor. [ ]

5 Assignment completion

The candidate will have satisfactorily completed this assignment if successful in all items marked with a [ ] and in at least 1 of the items marked with a ( ).

A period of seven days must elapse before an unsuccessful candidate may retake this assignment, selecting alternative problems to construct.

6 Assignment documentation

Loci of standard motions

6.1 Construct a cycloid of a rolling circle 75mm diameter.

6.2 Construct a hypocycloid for a rolling circle of radius 30mm and a base circle of radius 90mm.

6.3 Construct an involute on a base circle of 40mm diameter.

6.4 Construct the locus of point X for the slider crank mechanism shown in figure 6.4.

6.5 Construct the locus of points C and D for the mechanism shown in figure 6.5.

6.6 Construct three complete coils of a right hand square section spring with a pitch of 36mm and a pitch diameter of 96mm.

6 Assignment documentation

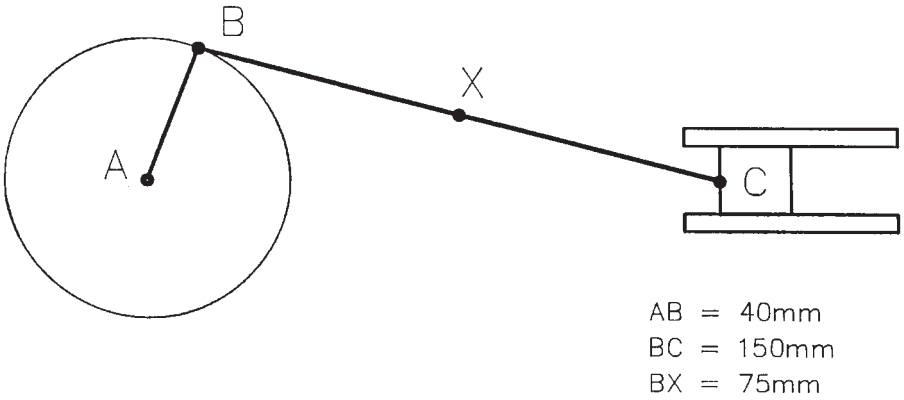

Figure 6.4

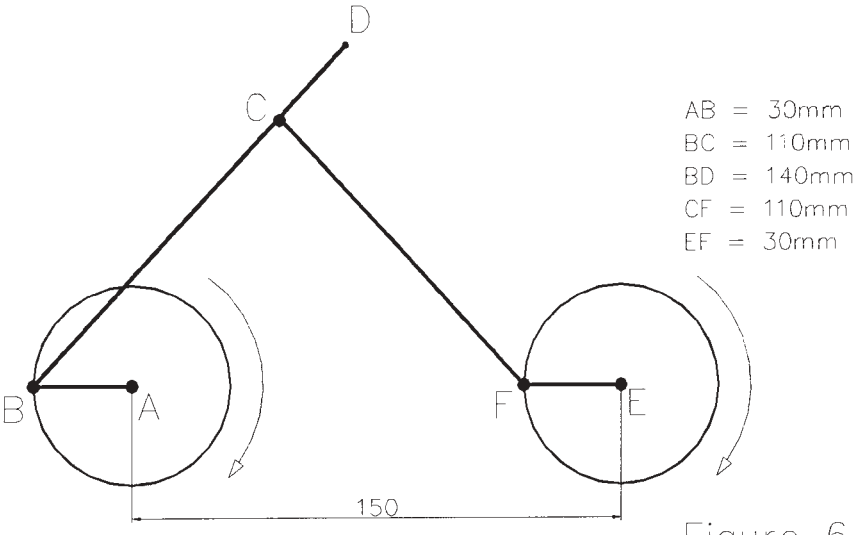

Figure 6.5

Practical assignment 014/4: Cam design

1 Competence references

14.12

2 Preparation

2.1 **Location of the test**
The training centre or other venue where supervision and appropriate working conditions will be provided.

2.2 **Requirements**
Drafting machine or drawing board and Tee square, drawing instruments and A3 drawing paper.

Copy of section 6.

2.3 **Instructor notes**
Candidates are required to draw the cam profile of two different types of cam configuration. The cam configurations are shown in section 6. The cam movement will be a combination of uniform velocity, uniform acceleration/retardation and simple harmonic motion. The types of followers include knife-edge, flat and offset roller.

Candidates have 2 hours to complete this assignment.

3 Candidates' instructions

3.1 You have 2 hours to complete this assignment. You are required to construct any two of the three cam profiles shown in section 6.

3.2 Produce drawing to BS308 or equivalent ISO standards.

3.3 Construct the follower displacement diagram for the chosen problem in section 6 showing:

3.3.1 the axis correctly drawn with appropriate divisions

3.3.2 accurately drawn movements.

3.4 Construct the cam profile using the follower displacement diagram showing:

3.4.1 basic geometry to scale

3.4.2 data correctly transferred from displacement diagram to obtain the follower positions

3.4.3 smooth curve to represent cam profile.

3.5 Show all construction lines clearly.

3.6 Ensure your name is on your work and hand it to the instructor.

4 Marking

4.1 Assignment is completed in 2 hours. ( )

4.2 Drawing produced to BS308 or equivalent ISO standards. ( )

4.3 The follower displacement diagram for the chosen problem in section 6 constructed, showing:

4.3.1 the axis correctly drawn with appropriate divisions [ ]

4.3.2 accurately drawn movements. [ ]

4.4 The cam profile using the follower displacement diagram constructed, showing:

4.4.1 geometry to scale [ ]

4.4.2 data correctly transferred to obtain follower positions [ ]

4.4.3 smooth curve to present cam profile. ( )

4.5 All construction lines clearly shown. ( )

4.6 Work handed in to the instructor. [ ]

5 Assignment completion

The candidate will have satisfactorily completed this assignment if successful in all items marked with a [ ] and 2 items marked with a ( ).

Candidates who fail to achieve the requisite number of outcomes may retake this assignment.

6 Assignment documentation

6.1 A disc cam using a knife edge follower

Disc cam minimum radius 50mm, shaft diameter 40mm and the cam rotates clockwise.
Use a knife edge follower.

Displacements and movements.

i 0 – 90 degrees rise of 40mm with uniform acceleration.
ii 90 – 180 degrees rise of 40mm with uniform retardation.
iii 180 – 360 degrees fall of 80mm with uniform velocity.

6.2 A disc cam using a flat follower

Disc cam minimum radius 40mm, shaft diameter 30mm and the cam routes anticlockwise.
Use a flat follower with 25mm contact area.

Displacements and movements.

i 0 – 180 degrees rise of 50mm with simple harmonic motion.
ii 180 – 210 degrees dwell.
iii 210 – 360 degrees fall of 50mm with uniform velocity.

6.3 A disc cam using an offset roller follower

Disc cam minimum radius 40mm, shaft diameter 30mm and the cam rotates clockwise. Roller offset 20mm from the vertical axis of the cam.

i 0 – 180 degrees rise of 50mm with simple harmonic motion.
ii 180 – 270 degrees dwell.
iii 270 – 360 degrees fall of 50mm with uniform retardation.

016 Manufacturing Technology

Introduction

The aim of this unit is to develop experience of workshop operations and to gain knowledge of common machining processes. Candidates progress through the activities of the module by undertaking project-based assignments. A product or component assembly should be manufactured utilising component parts that have been produced on the various machine tools within the workshop.

Safety is of paramount importance and must be introduced into every aspect of the work within this unit.

Practical competences

Candidates must be able to do the following:

Health and safety objectives

16.1 Comply with the general rules for safe practice in the working environment at all times.

16.2 Use all tools correctly ensuring that machinery guards and protective eye shields are used at all times.

16.3 Wear the correct clothing, including safety boots, overalls, gloves and protective helmet where appropriate.

16.4 Handle, lift and store materials correctly at all times.

16.5 Use the specified protective electrical safety devices at all times.

Preparation for machining and fitting

16.6 Demonstrate safe and skilful use of hand tools.
Hand tools: hacksaws, files, chisels, scrapers, hammers, spanners, reamers, dies and stocks, taps and wrenches, bench vice, clamps, presses

16.7 Use standard marking out equipment.
Equipment: surface plate, surface table, angle plate, marking ink, vee blocks, scribing block, parallels, rule, scriber, scribing block, dividers, hermaphrodite calipers (odd legs), square, centre finder

16.8 Use safe, secure and accurate work clamping procedures.

16.9 Demonstrate safe and secure tool-handling procedures.

16.10 Operate a pedestal drill to produce counter-bored holes, counter-sink holes, reamed holes.

16.11 Produce an internal and external screw thread using standard taps and dies.

Inspection

16.12 Use workshop standards to check length, flatness, straightness, squareness.

16.13 Use a vernier caliper and vernier micrometer to check the size of a component.

16.14 Use gauges to check for dimension conformity.

16.15 Use a sine bar to check angular measurement.

Machine turning

16.16 Select an appropriate lathe tool for a particular machining operation.
Machining operations: rough turning, finish turning, boring, undercutting, parting off, knurling

16.17 Use a centre lathe to produce machined features.
Machined features: external diameters, bored holes, undercuts, chamfers, radii, knurling, external screw threads and internal screw threads using taps and dies

16.18 Produce internal and external single start vee form screw threads using a single point cutting tool and chaser.

16.19 Produce tapers using several methods.
Methods: compound slide, offset tailstock centre, form tool, taper turning attachment

16.20 Machine a regular shaped component using a four jaw independent chuck.

16.21 Use a faceplate to face and bore a component.

16.22 Demonstrate why under certain circumstances balancing weights are clamped to the faceplate.

16.23 Machine a spindle or shaft between centres, using a driving plate, dog and travelling steady.

Milling

16.24 Identify, in the workshop, common milling cutters and typical uses.
Common milling cutters: helical slab, side and face, slotting, angular, slitting saw, form, gear form, end mill, slot drill, tee slot, face mill

16.25 Operate a horizontal milling machine to produce flat surfaces and slots.

16.26 Produce a component by gang milling or straddle milling.

16.27 Operate a vertical milling machine to produce flat surfaces, slots and angular surfaces.

16.28 Use a dividing head on a vertical milling machine to produce a square section on the end of a spindle.

16.29 Use a dividing head on a horizontal milling machine to produce a gear wheel.

16.30 Operate a vertical milling machine to produce bored holes.

Shaping

16.31 Demonstrate methods of work holding.

16.32 Produce flat vertical and angular surfaces and serrations.

Grinding
Note on Safety – Adherence to the grinding wheel regulations is obligatory!

16.33 Demonstrate, under supervision, the procedure for wheel truing and wheel dressing.

16.34 Demonstrate the principle of operation of a permanent magnet chuck.

16.35 Operate, under supervision, a horizontal surface-grinding machine to produce a component with parallel sides and square sides.

16.36 Operate, under supervision, a plain cylindrical grinding machine to produce a spindle.

16.37 Use, under supervision, a pedestal tool-grinding machine to sharpen lathe tools and drills.

Practical assignment 016/1: Manufacturing a surface gauge

1 Competence references

16.1- 16.37

2 Preparation

2.1 **Location of test**
Workshop or training centre under supervision.

2.2 **Requirements**
Marking out and measuring equipment, hand tools, bench or pillar drill, centre lathe, shaping machine, milling machines vertical and horizontal, surface grinding machines.

Copy of section 6. Materials refer to drawing numbers: AMEE2AD, AMEE2B, AMEE2B1, AMEE2C&D, AMEE2E, AMEE2F, AMEEG&H, AMEE2I&J.

2.3 **Instructor notes**
The aim of this assignment is to manufacture parts using hand tools and a number of different machine tools, then to assemble the parts to form a surface gauge. Instructors monitor candidates' work and on completion of each part and during assembly. The time allowed for this assignment is 30 hours.

It is essential that candidates have a sound knowledge of workshop safety.

The design can be modified or an alterative method of manufacture used should the assignment present undue problems.

3 Candidates' instructions

3.1 Ensure that you understand the requirements of the assignment before commencement. If in doubt, ask your instructor for guidance.

In this assignment you have 30 hours to manufacture all the parts detailed of a surface gauge and assemble as shown in drawing AMEE2AD.

You must not operate any machine until you have proved to your instructor that you are competent to do so.

3.2 Observe health and safety regulations at all times.

3.3 Ensure that:
3.3.1 tolerances for each part are as stated on the detailed drawings

3.3.2 an operation sheet for each part is produced and checked with your instructor.

3.4 Part 2A – Scriber point
3.4.1 Grind point using off hand grinding machine.

3.4.2 Cut and file to length 50mm.

3.4.3 Harden point, heat to 800/850° using gas/air torch, quench with water.

3.4.4 Clean before tempering to light straw.

3.5 Part 2B Base (drawing AMEE2B)

3.5.1 Mill the two sawn faces to size and square with the other faces using a slab mill on a horizontal milling machine.

3.5.2 Mark out the two angles 2mm oversize and dot punch each, and the position, width and depth of the two concave grooves.

3.5.3 Shape the angles to the punch marks.

3.5.4 Shape the two concave grooves 2.5mm deep.

3.5.5 Mill angles using slab mill.

3.5.6 Mill grooves to size.

3.5.7 Mill pocket with slot drill.

3.5.8 Drill and tap M10 thread.

Part 2B (drawing AMEE2B1)

3.5.9 Grind surfaces as stated on drawing.

3.6 Part 2C Stem (drawing AMEE2C&D)

3.6.1 Turn the component.

3.7 Part 2D Blade (drawing AMEE2C&D)

3.7.1 Blue surfaces and mark outline. Mark slot and centre marks for chain drilling.

3.7.2 Drill 5mm, 8mm holes.

3.7.3 Chain drill slot 7.5mm drill.

3.7.4 File slot to size.

3.7.5 Saw and file to shape.

3.7.6 File vee.

3.8 Part 2E Locking Nut (drawing AMEE2E)

3.8.1 Blue surfaces and mark out.

3.8.2 Drill 3mm holes.

3.8.3 File 38 x 8 x 5 size.

3.8.4 File 38 x 8 x 6 angle.

3.8.5 Mill one end square.

3.8.6 Mill the three angled faces.

3.8.7 Drill and tap M6 thread.

3.9 Parts 2F Clamp Block (drawing AMEE2F)

3.9.1 Face both ends and to length.

3.9.2 Mark out hole centres and centre punch.

3.9.3 Drill and ream 14mm hole.

3.9.4 Drill and ream 10mm hole using centre lathe.

3.9.5 Mill eight chamfers using vertical milling machine.

3.10 Parts 2G Clamp Pin, 2H Washer (drawing AMEE2G&H), 2I Locking Pin, 2J Adjusting Screw (drawing AMEE2I&J)

3.10.1 Turn clamp pin.

3.10.2 Turn washer.

3.10.3 Turn locking pin.

3.10.4 Turn adjusting screw.

3.11 Final Assembly

3.11.1 Inspect all parts are within the stated tolerances and record your results.

3.11.2 Assemble.

3.11.3 Test.

3.12 Ensure that your name is on all your work and hand it in to the instructor.

4 Marking

4.1 Assignment completed in 30 hours. ( )

4.2 Health and Safety regulations observed at all times. [ ]

4.3.1 Tolerances for each part as stated on the detailed drawings. [ ]

4.3.2 An operation sheet for each of the tasks produced and checked by the instructor. [ ]

4.4 Part 2A – Scriber point

4.4.1 Point ground using off hand grinding machine. [ ]

4.4.2 Cut and filed to length 50mm. [ ]

4.4.3 Point hardened, heated to 800/850˚ using gas/air torch, quenched with water. [ ]

4.4.4 Cleaned before tempering to light straw. [ ]

4.5 Part 2B Base

4.5.1 The two sawn faces milled to size and squared with the other faces using a slab mill on a horizontal milling machine. [ ]

4.5.2 The two angles marked out 2mm oversize and each dot punched, and the position, width and depth of the two concave grooves. [ ]

4.5.3 The angles shaped to the punch marks. [ ]

4.5.4 The two concave grooves shaped 2.5mm deep. [ ]

4.5.5 Angles milled using slab mill. [ ]

4.5.6 Grooves milled to size. [ ]

4.5.7 Pocket milled with slot drill. [ ]

4.5.8 M10 thread drilled and tapped. [ ]

Part 2B

4.5.9 Surfaces ground as stated on drawing. [ ]

4.6 Part 2C Stem

4.6.1 The component turned. [ ]

4.7 Part 2D Blade

4.7.1 Surfaces blued and outline marked. Slot marked and centre marked for chain drilling. [ ]

4.7.2 5mm, 8mm holes drilled. [ ]

4.7.3 Slot 7.5mm drill chain drilled. [ ]

4.7.4 Slot filed to size. [ ]

4.7.5 Sawn and filed to shape. [ ]

4.7.6 Vee filed. [ ]

4.8 Part 2E Locking Nut

4.8.1 Surfaces blued and marked out. [ ]

4.8.2 3mm holes drilled. [ ]

4.8.3 38 x 8 x 5 size filed. [ ]

4.8.4 38 x 8 x 6 angle filed. [ ]

4.8.5 One end milled square. [ ]

4.8.6 The three angled faces milled. [ ]

4.8.7 M6 thread drilled and tapped. [ ]

4.9 Parts 2F Clamp Block

4.9.1 Both ends faced and to length. [ ]

4.9.2 Hole centres marked out and punch centred. [ ]

4.9.3 14mm hole drilled and reamed. [ ]

4.9.4 10mm hole drilled and reamed using centre lathe. [ ]

4.9.5 Eight chamfers milled using vertical milling machine. [ ]

4.10 Parts 2G Clamp Pin, 2H Washer, 2I Locking Pin, 2J Adjusting Screw

4.10.1 Clamp pin turned. [ ]

4.10.2 Washer turned. [ ]

4.10.3 Locking pin turned. [ ]

4.10.4 Adjusting screw turned. [ ]

4.11 Final assembly

4.11.1 All parts inspected as being within the stated tolerances; results recorded. [ ]

4.11.2 Assembled. [ ]

4.11.3 Tested. [ ]

4.12 Worked handed in to the instructor. [ ]

5 Assignment completion

The candidate will have satisfactorily completed this assignment if successful in all items marked with a [ ].

Candidates who fail to achieve the requisite number of outcomes should be encouraged to carry out further work in order to complete the assignment satisfactorily.

6 Assignment documentation

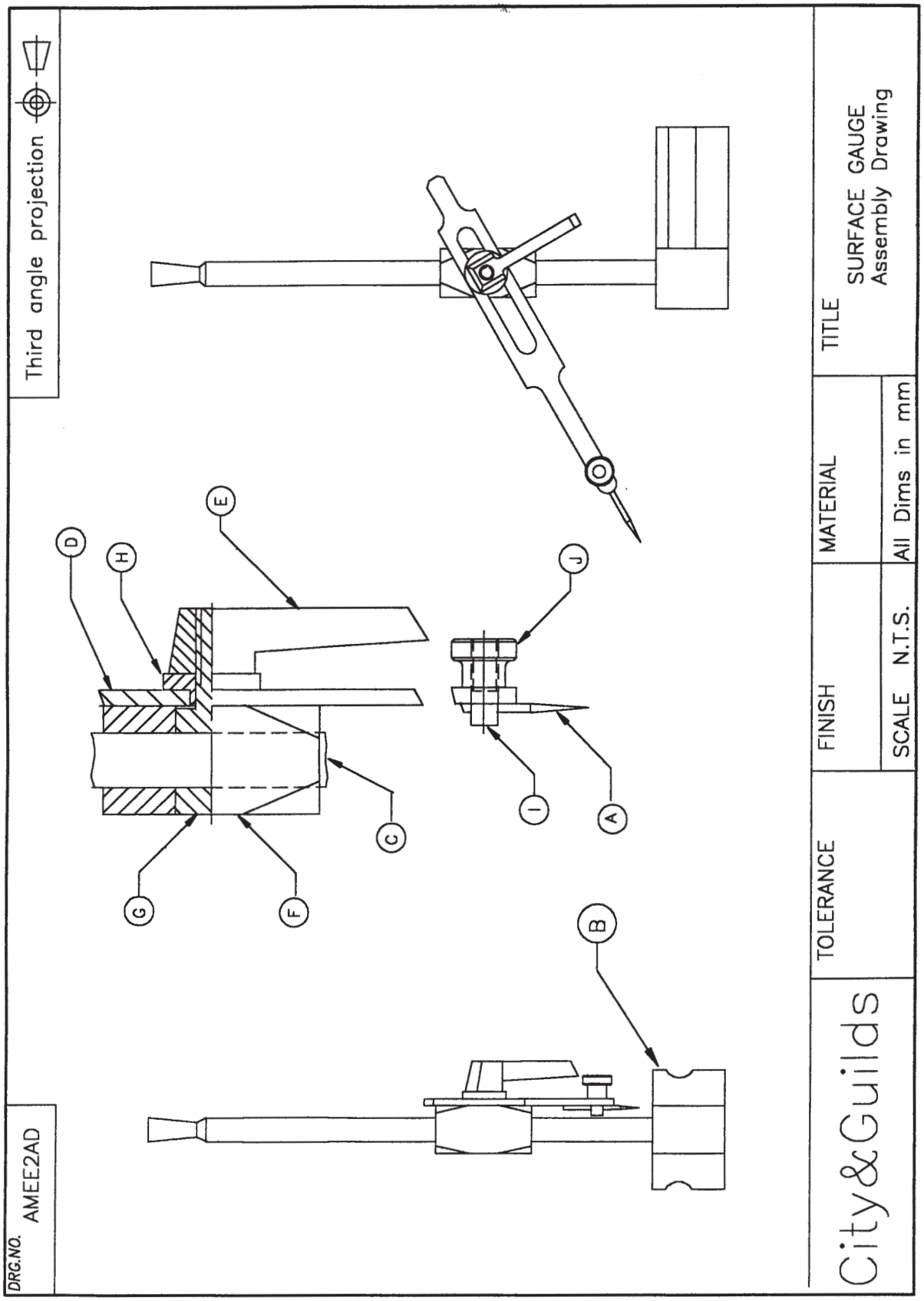

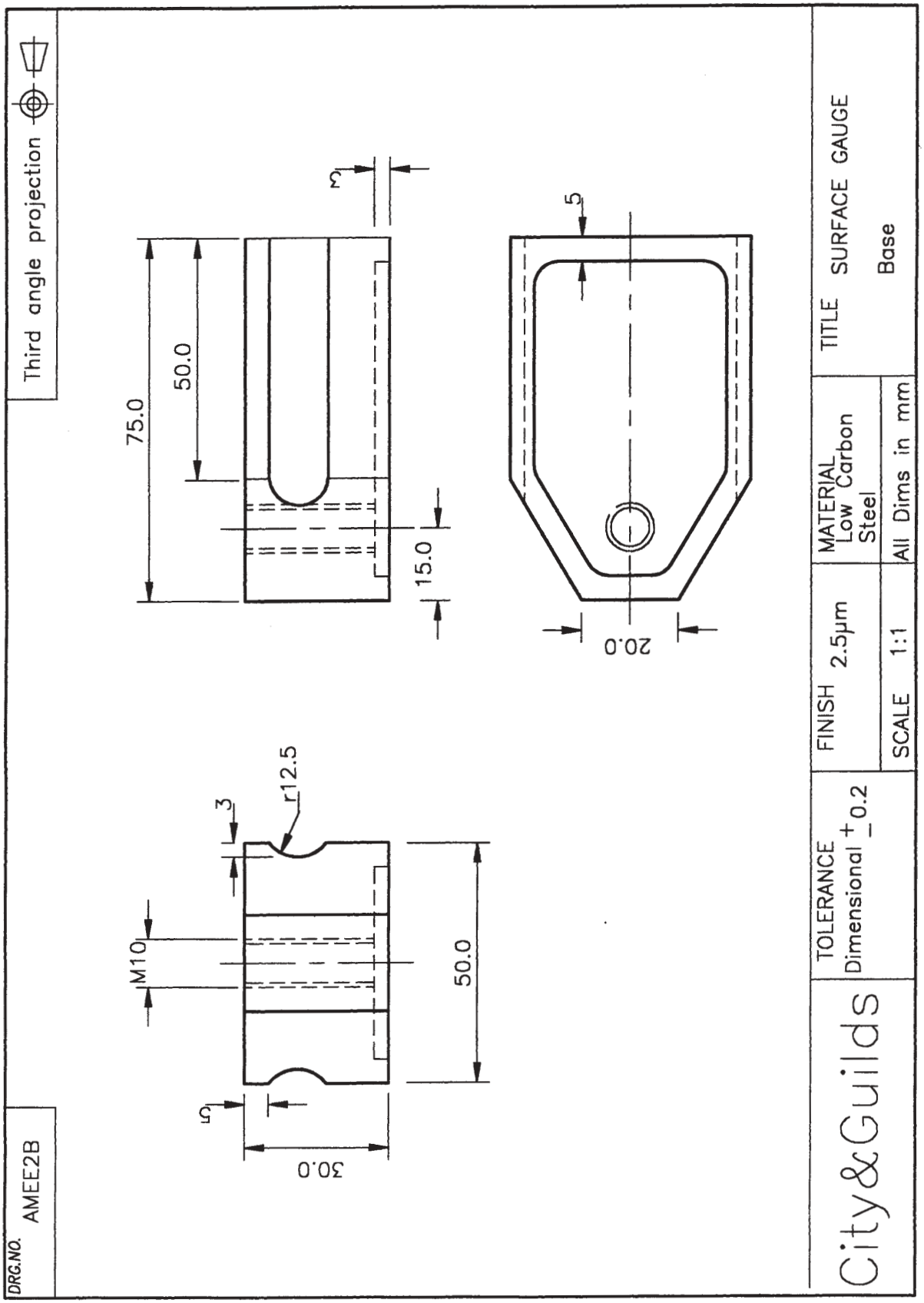
Third angle projection
DRG.NO.
AMEE2B
75.0
50.0
15.0
5
20.0
5
3
r12.5
M10
50.0
5
30.0
City&Guilds
TOLERANCE
Dimensional ±0.2
FINISH
2.5µm
SCALE
1:1
MATERIAL
Low Carbon Steel
All Dims in mm
TITLE
SURFACE GAUGE
Base

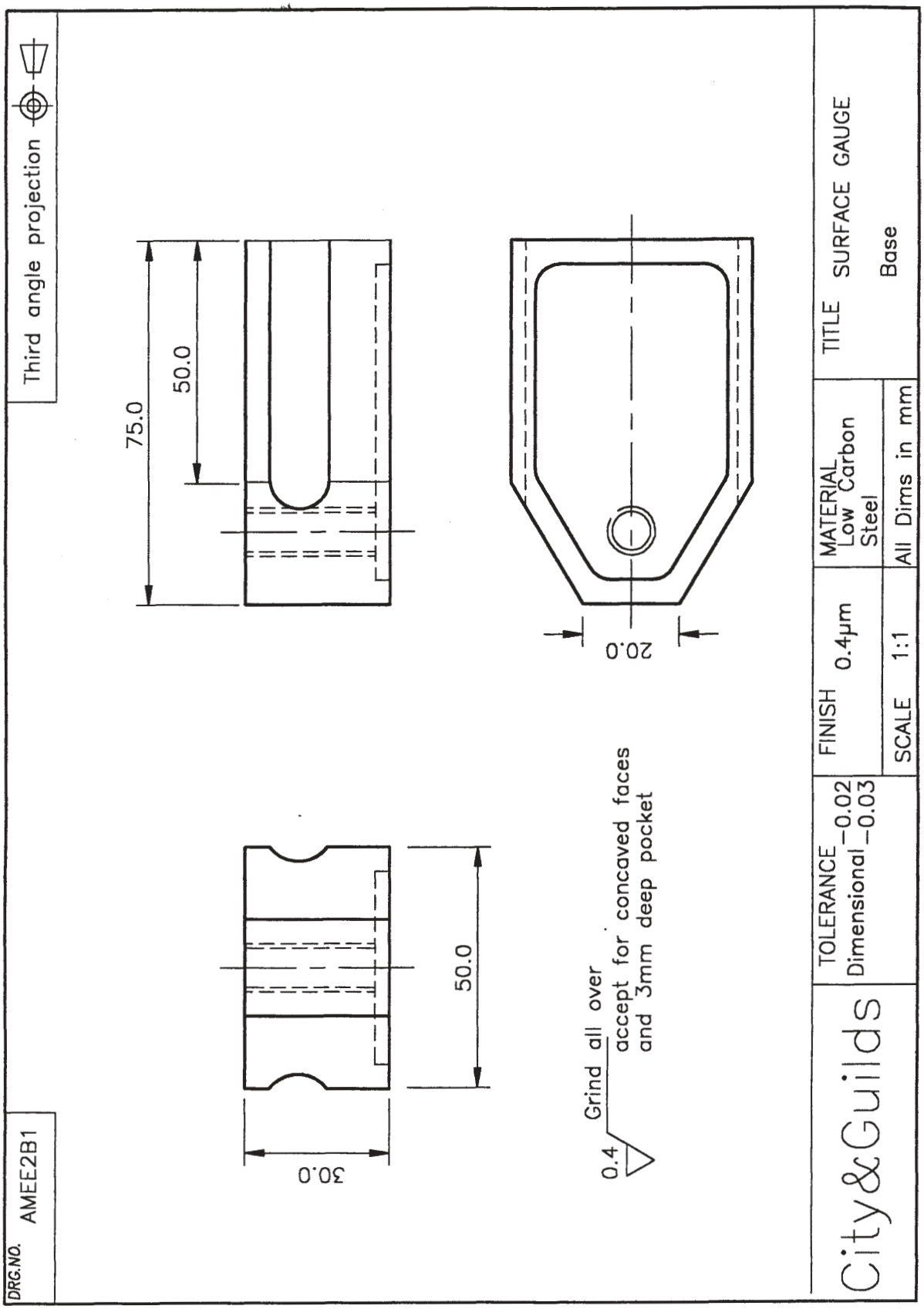
Third angle projection
DRG.NO. AMEE2B1
75.0
50.0
20.0
30.0
50.0
0.4
Grind all over
accept for concaved faces
and 3mm deep pocket
City&Guilds
TOLERANCE Dimensional −0.02 −0.03
FINISH 0.4µm
SCALE 1:1
MATERIAL Low Carbon Steel
All Dims in mm
TITLE SURFACE GAUGE
Base

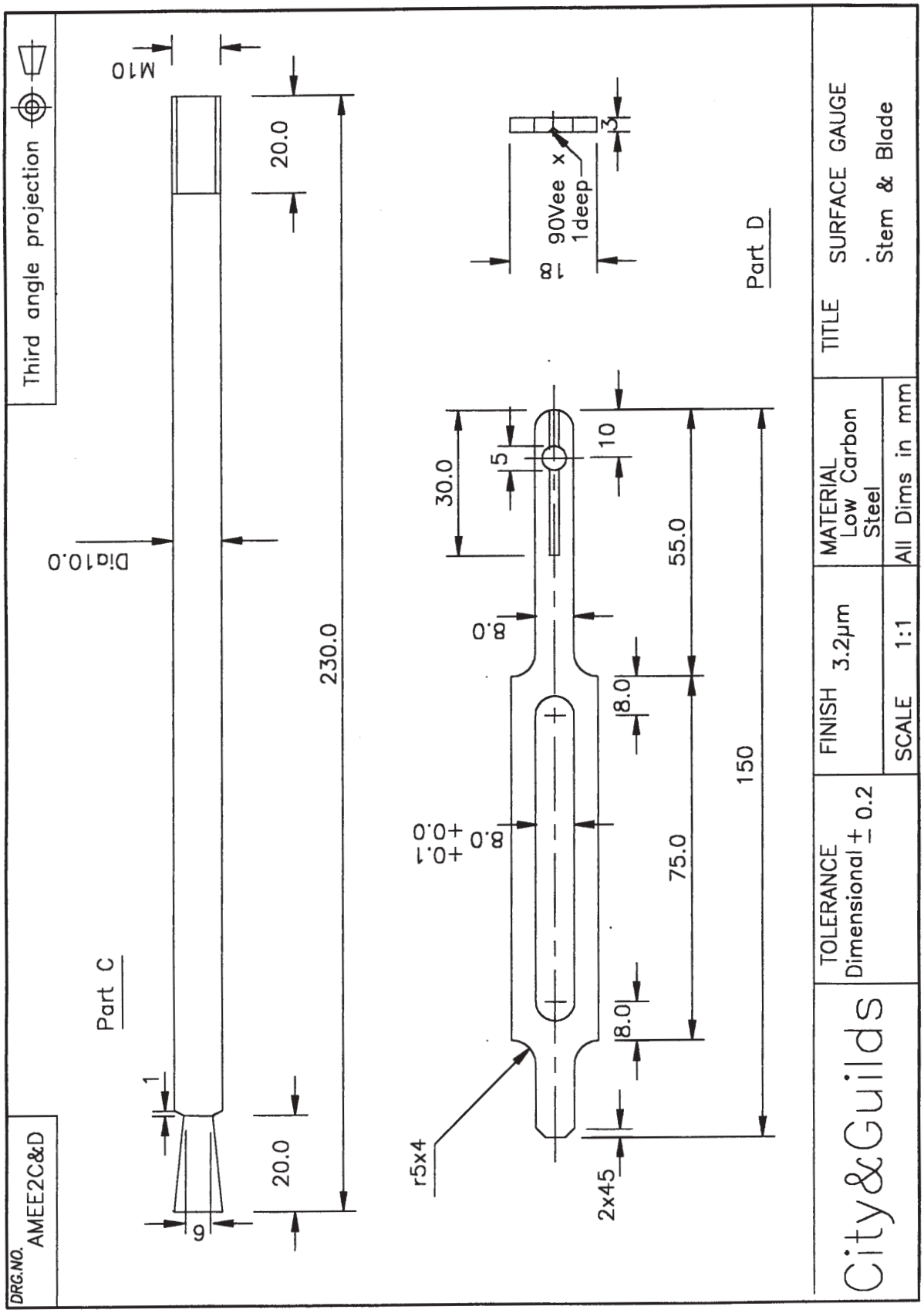
Third angle projection
DRG.NO.
AMEE2C&D
M10
Dia10.0
20.0
230.0
20.0
1
6
Part C
90Vee x
1deep
18
3
Part D
30.0
5
10
8.0
55.0
8.0
150
8.0 +0.1 +0.0
75.0
8.0
r5x4
2x45
TITLE
SURFACE GAUGE
Stem & Blade
MATERIAL
Low Carbon
Steel
All Dims in mm
FINISH 3.2µm
SCALE 1:1
TOLERANCE
Dimensional ± 0.2
City&Guilds

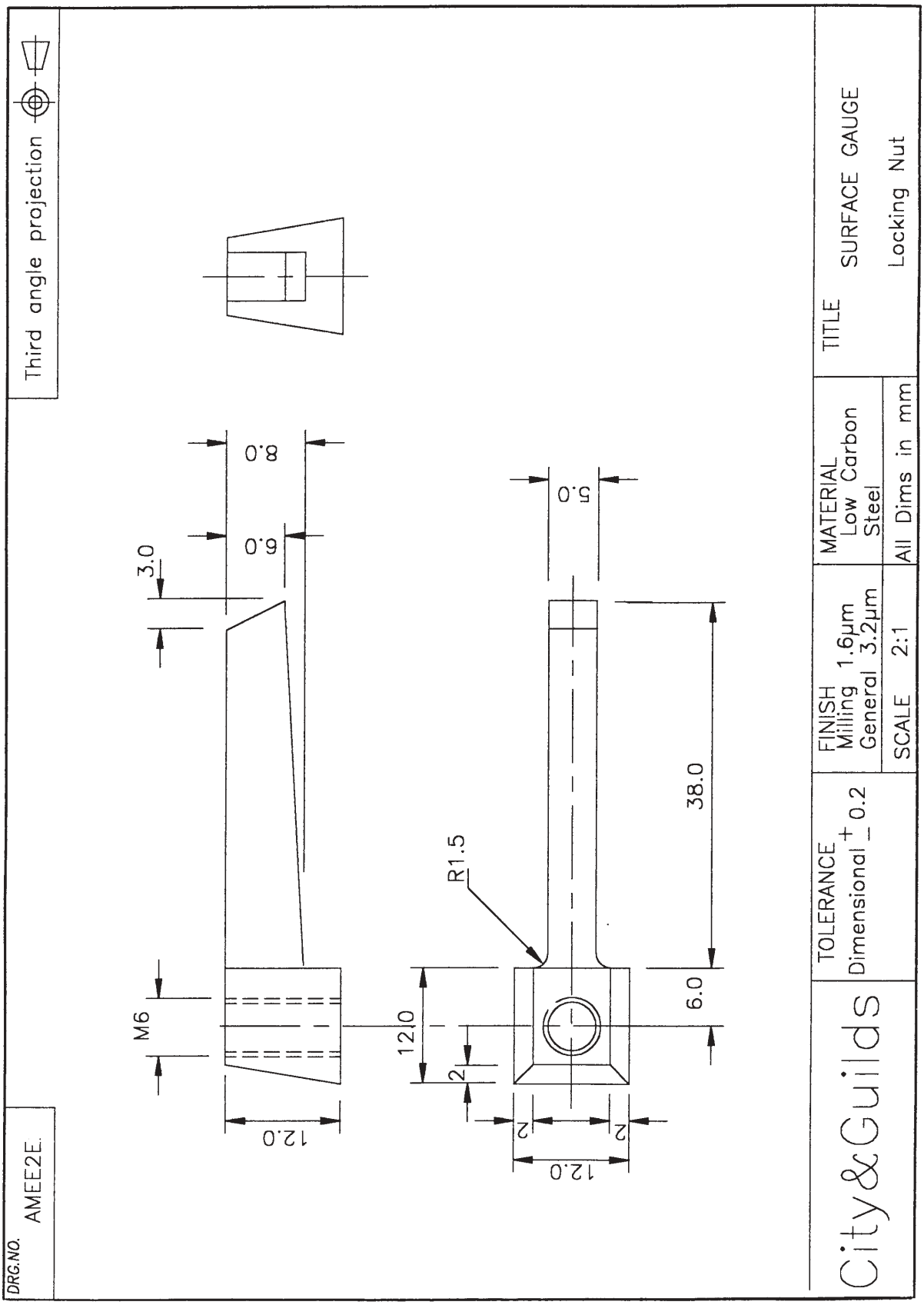
Third angle projection
DRG.NO.
AMEE2E.
M6
12.0
3.0
6.0
8.0
12.0
2
R1.5
2
2
12.0
5.0
38.0
6.0
TOLERANCE
Dimensional ± 0.2
FINISH
Milling 1.6µm
General 3.2µm
SCALE 2:1
MATERIAL
Low Carbon Steel
All Dims in mm
TITLE
SURFACE GAUGE
Locking Nut
City&Guilds

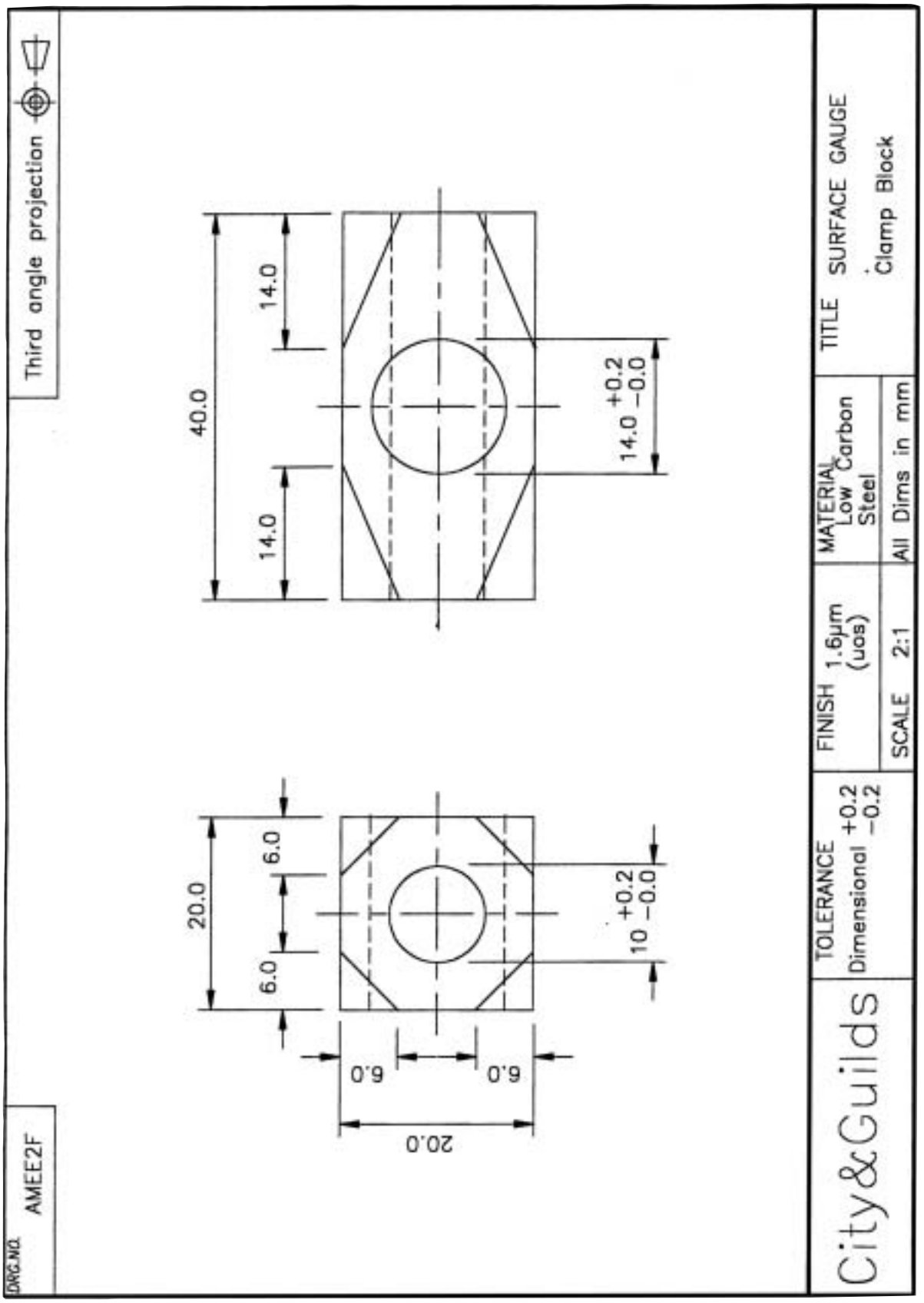
Third angle projection
40.0
14.0
14.0
14.0 +0.2 −0.0
20.0
6.0
6.0
10 +0.2 −0.0
6.0
6.0
20.0
DRG.NO.
AMEE2F
City&Guilds
TOLERANCE
Dimensional +0.2 −0.2
FINISH 1.6µm (uos)
SCALE 2:1
MATERIAL Low Carbon Steel
All Dims in mm
TITLE SURFACE GAUGE
Clamp Block

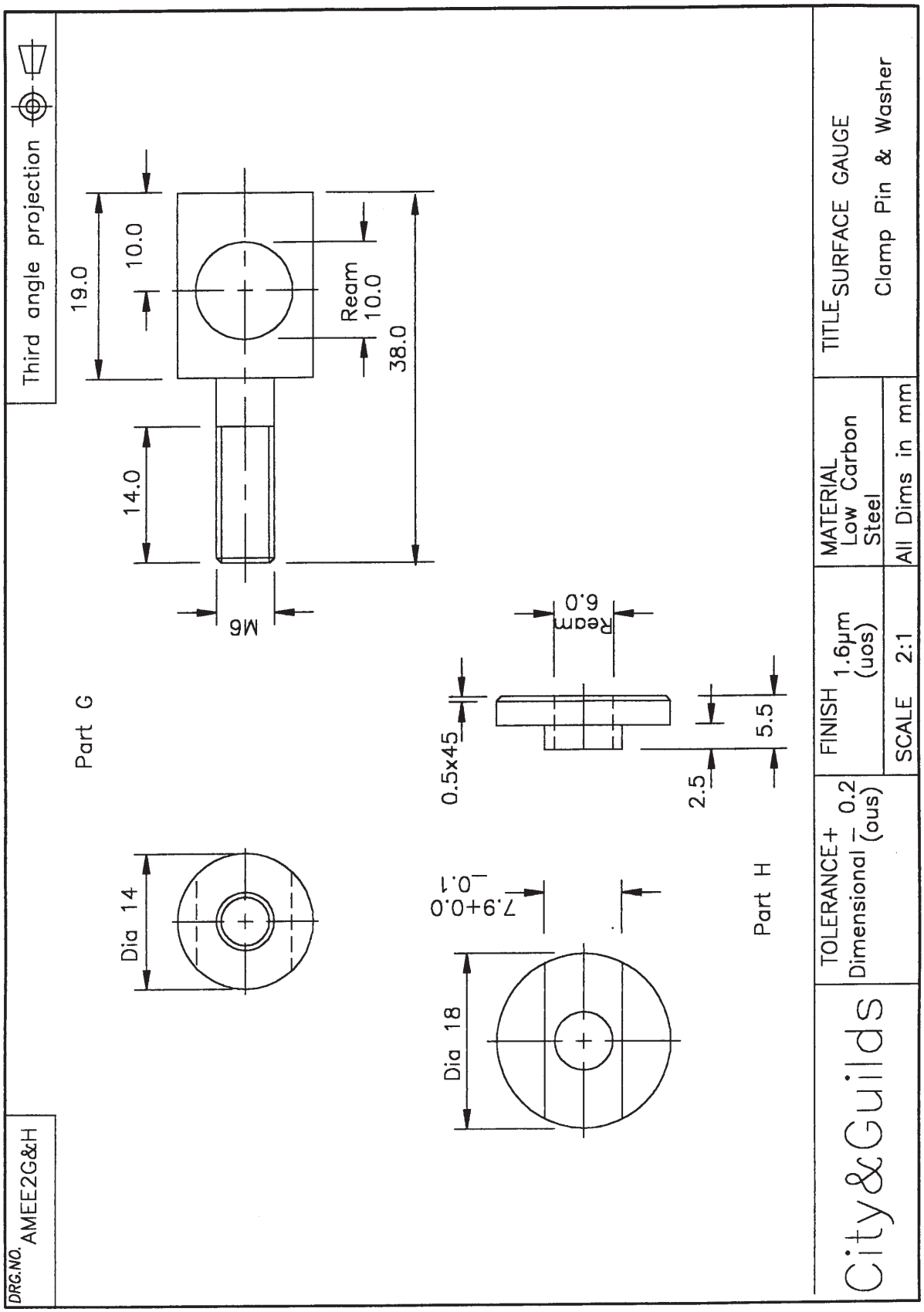
Third angle projection
19.0
10.0
Ream
10.0
38.0
14.0
M6
Part G
Ream
6.0
0.5x45
5.5
2.5
Dia 14
7.9+0.0
-0.1
Dia 18
Part H
DRG.NO. AMEE2G&H
City&Guilds
TOLERANCE+ Dimensional - 0.2 (ous)
FINISH 1.6µm (ous)
SCALE 2:1
MATERIAL Low Carbon Steel
All Dims in mm
TITLE SURFACE GAUGE
Clamp Pin & Washer

DRG.NO. AMEE2I&J

Third angle projection

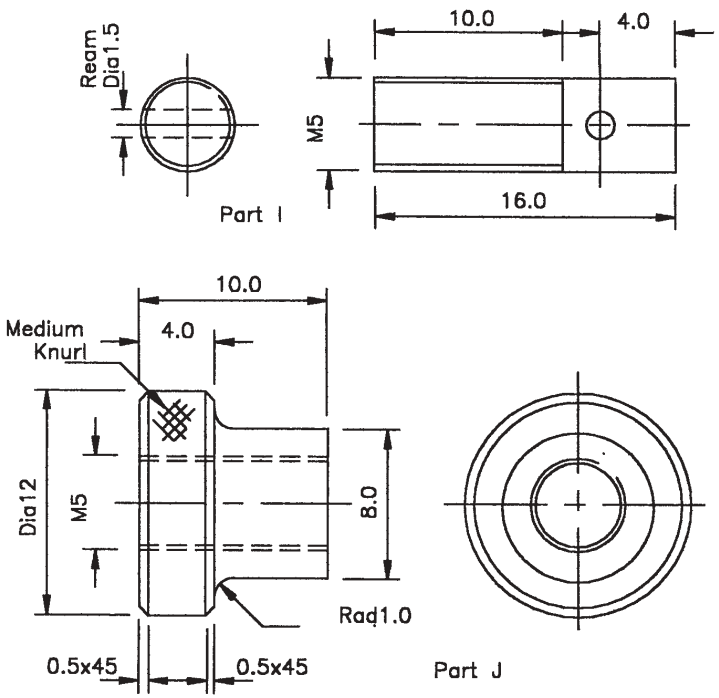

2J	Dia12 Low Carbon Steel
2I	Dia5 Low Carbon Steel
2H	Dia19 Low Carbon Steel
2G	Dia15 Low Carbon Steel
2F	20x20x44 Low Carbon Steel
2E	12x12x54 LOw Carbon Steel
2D	18x3x154 Low Carbon Steel
2C	Dia10x234 Low Carbon Steel
2B	75x50x34 Low Carbon Steel
2A	Dia1.5 High Carbon Steel Scriber Point
Part	Material

Parts and Materials List

City&Guilds

TOLERANCE Dimensional ±0.2

FINISH 1.6μm (uos)

SCALE 3 : 1

MATERIAL Low Carbon Steel

All Dims in mm

TITLE SURFACE GAUGE
Locking Pin & Adjusting Screw

017 Manufacturing Theory and Processes

Introduction

The aim of this unit is to provide candidates with knowledge of a range of manufacturing processes. The importance of economical manufacture and process selection will be considered throughout the unit.

Knowledge requirements

Instructors must ensure that candidates are able to:

Preparation for fitting and machining

17.1 Describe the features, applications, safe use and care of a range of hand/bench tools.
Tools: hacksaws, files, chisels, scrapers, hammers, spanners, reamers, dies and stocks, taps and wrenches, bench vice, clamps, presses

17.2 Describe the features, applications and care of a range of marking out equipment.
Equipment: rule, scriber, marking ink, square, centre finder, dividers, hermaphrodite calipers (odd legs), surface table, surface plate, angle plate, vee blocks, parallels, scribing block

17.3 Explain requirements relating to the safe use of drilling machines.

17.4 Describe the main features of a pillar drill.
Features: guarding, pillar, table, spindle (chucks, sleeves and sockets), hand feed, depth stop, transmission system

17.5 Identify a range of drills, cutters and reamers.
Drills: flat, spade, twist, tipped
Cutters: counter boring, counter sinking, spot facing
Reamers: fixed, adjustable

17.6 Describe work holding devices used on a pillar drill.
Devices: vices (hand and machine), clamps, vee-blocks

Measurement and inspection

17.7 Explain Taylor's principle of gauging.

17.8 State the difference between measuring and gauging.

17.9 Describe using sketches methods of gauging.
Methods: electronic, mechanical, optical, pneumatic, laser

17.10 State the use of end and line standards.

17.11 Explain parallax error.

17.12 Describe the features, applications and care of workshop standards, measuring instruments and gauges.
Standards: length (slip gauges), flatness (surface tables and plates), straightness (straight edges), squareness (engineers square)
Instruments: rule, calipers (inside and outside), depth gauge, combination set, micrometers (inside and outside), verniers (caliper, height, depth, protractor, micrometer), dial indicator, sine bar
Gauges: bevel, try square, limit (plug, ring, snap, caliper, pin, taper, thread), feeler

Machine turning

17.13 Explain requirements relating to the safe use of centre lathes.

17.14 Describe the main features of a centre lathe.
Features: guarding, movements, head stock, spindle nose, tailstock, bed slides, carriage (cross and compound slides, tool post), screw cutting gear box (or change wheels), power transmission system, coolant system, swing and centre distance

17.15 Describe methods of work holding and the use of fixed and travelling steadies.
Methods: chucks (3-jaw, 4-jaw and collet), face plate, clamps and balance weights, driving plate, dog and centres

17.16 Identify and state applications of a range of tools.
Tools: solid (tipped, round nose, finishing, knife, screw cutting, form, boring, parting off), tool bits and holders, knurling

17.17 Calculate speeds and feeds and use speed and feed tables.

17.18 Calculate simple and compound gear wheel trains for screw cutting.

17.19 Sketch the forces acting on single point cutting tools.

17.20 Describe the procedure for tool setting.

17.21 Define the term 'tool life' using Taylor's tool life equations and calculate the tool life from given data.

17.22 Describe procedures for a range of machine turning operations.
Operations: drilling and boring, tapering (compound, slide, offset tail stock centre, taper turning attachment), hand threading (taps and dies), screw cutting using single point tool and chaser (change wheels and screw cutting gear box)

Milling

17.23 Explain statutory requirements relating to the safe use of milling machines.

17.24 Describe the main features of horizontal and vertical milling machines.
Features:
Common: work movements, knee and elevating screw, saddle, table, coolant system
Horizontal: arbor, arbor support, over arm power transmission system
Vertical: spindle head, power transmission system

17.25 Describe work holding devices.
Devices: machine vice, clamps, vee blocks, dividing head

17.26 Identify and state applications of a range of cutters.
Cutters: horizontal (helical slab, side and face, slotting, angular, slitting and gear form), vertical (end, slot drill, tee slot and face)

17.27 Describe gang milling and straddle milling.

17.28 Calculate peripheral speeds, average cutting speeds and feeds.

17.29 Sketch the forces acting on multi-point cutting tools.

17.30 Carry out simple and angular indexing calculations for a standard dividing head.

Shaping

17.31 Explain requirements relating to the safe use of shaping machines.

17.32 Describe the main features of a shaping machine.
Features: guarding, tool and work movements, knee and elevating screw, clapper box, ram, drive and feed mechanisms

17.33 Describe work holding devices.
Devices: heavy machine vice, clamps, vee blocks

17.34 Identify a range of tools.
Tools: straight rougher, side, slotting, finishing

Grinding

17.35 Explain the statutory requirements relating to the safe use of abrasive wheels.

17.36 Describe the main features of a pedestal tool grinder.
Features: guarding, motor, pedestal, on/off buttons, grinding wheels, tool rests

17.37 Describe the procedure for sharpening and truing a grinding wheel.

17.38 Describe the main features of a horizontal surface grinder.
Features: guarding, wheel and work movements, base, control panel, lower and work tables, hand feed and traverse, wheel head and head control, grinding wheel, power transmission system, coolant system

17.39 Describe the construction and explain the principle of operation of a permanent magnetic chuck.

17.40 Describe the main features of a plain cylindrical grinder.
Features: guarding, wheel and work movements, base, control panel, lower and work tables, hand table and wheel feed controls, trips, head stock, tailstock, grinding wheel, power transmission system, coolant system

Metal cutting

17.41 Explain the theory of orthogonal cuttings and oblique cutting.

17.42 Define the difference between roughing and finishing operations.

17.43 Describe chip formation.
Chip formation: types, use of a chip breaker, built up edge

17.44 Explain the advantages of using a cutting fluid.
Advantages: cooling, lubrication, prevents chip welding, removes chips, surface finish, anti- corrosive qualities

17.45 Identify a range of common cutting tool materials and state advantages and limitations.
Cutting tool materials: high carbon steel, high speed steel, cemented carbides

17.46 List typical surface finishes produced by a range of machine tools.
Machine tools: lathe, milling machine, shaping machine grinding machine (surface)

17.47 Describe the three basic components of Computer Numerical Control (CNC).
Components: part programming, control unit, tool holding

17.48 Compare the principle of operation of a CNC machine tool to a traditional manually operated machine tool.

17.49 List the main benefits of using a CNC machine tool.
Benefits: high repeatability, complex shapes, consistency standard

Metal casting processes

17.50 State the advantages of metal casting processes over machining.
Advantages: cast to shape, size of casting, complexity of shape, range of metals, economy

17.51 Explain the difference between expendable moulds and permanent moulds.

17.52 Describe a process of preparing a sand casting mould.

17.53 Sketch a section of a sand casting mould showing common features.

17.54 Describe the processes of shell moulding and investment casting.

17.55 Describe the hot chamber die casting process and the cold chamber die casting process.

17.56 State the process capabilities of hot chamber die casting and cold chamber die casting.
Capabilities: weight, cycle time, melting plant, pressure range, materials

Forming and shaping of metals

17.57 Describe the general characteristics of the common forming processes and state typical applications.
Forming processes: forging, extrusion, drawing

17.58 Describe the principle of the rolling process and state typical applications.

17.59 Describe the process of forging.
Process: machine forging, open forging, closed forging

17.60 Describe the process of drawing and state typical applications.

17.61 Explain the difference between punching and blanking.

17.62 State the difference between compound dies, progressive dies and transfer dies.
Difference: compound dies (several operations are performed in one stroke of the die), progressive dies (a different operation is performed at the same station with each stroke of a series of punches), transfer dies (the sheet metal undergoes different operations at different stations)

17.63 Describe the forming process of sheet metal fabrication and state typical applications.
Processes: bending, rolling
Applications: eg ducting, cabinets, tube and sections

Forming shaping of polymer (plastics) materials

17.64 Describe plastic forming processes and state typical applications.
Processes: extrusion, injection moulding, compression moulding

17.65 List the advantages and limitations of the plastic forming processes.

Welding

17.66 Describe welding processes and state the associated health and safety requirements.
Welding processes: manual metal arc, oxy-fuel, metal arc gas shielded, (MAGS), tungsten-arc gas-shielded (TAGS)

17.67 State typical applications for welding processes.

Assembly

17.68 Describe the factors that need to be taken into account when considering automating an assembly process.
Factors: assembly cost, production rate, labour cost, market life of the product, cost of automation

17.69 Explain the term interchangeability and list the economic benefits.
Economic benefits: use of semi skilled labour, automation, reduced costs

17.70 Describe, giving examples, the principle of limits and fits with reference to BS4500 (shaft basis) or equivalent international standard.

17.71 List the tolerance band associated with various manufacturing processes.
Processes: sand casting, forging, die casting, turning, milling, drilling, reaming, grinding, lapping

Test specification for written paper Manufacturing Theory and Processes (2565-02-017)

This is a written examination paper lasting three hours with ten questions. Candidates must answer **all** 10 questions.

The examination paper will cover the knowledge specifications:

Topic	Approximate % examination weighting
Preparation for fitting and machining	8
Measurement and inspection	8
Machine turning	14
Milling	10
Shaping	8
Grinding	10
Metal cutting	10
Metal casting	10
Forming and shaping or metals and plastics	12
Welding and assembly	10

Introduction

The aim of the unit is to gain an awareness of the importance of material selection, plant and equipment considerations, drawing office systems and labour considerations.

Knowledge requirements

Instructors must ensure that candidates are able to:

Material range

18.1 Describe each of the basic material classifications and identify typical applications for each.
Classification: metallic (ferrous, non-ferrous, alloys), non-metallic (polymers, elastomers, composites, ceramics, glasses)

Carbon steels

18.2 State the mechanical properties associated with different carbon content.
Properties: material composition, tensile strength, elongation, hardness, thermal conductivity, electrical conductivity and toughness
Different carbon content: low 0.1 – 0.25, medium 0.25 – 0.7, high 0.7 – 1.3

18.3 Describe methods of improving mechanical properties by heat treatment.
Heat treatment processes: hardening, tempering, full annealing, process annealing, normalising

Polymeric materials

18.4 Identify the mechanical properties associated with thermoplastics.
Thermoplastics: polyethylene, polyvinyl chloride (PVC), polypropylene, polystyrene, nylon
Properties: tensile strength, elongation, relative density, glass transition temperature, melting point

18.5 Identify the mechanical properties associated with thermosetting plastics.
Thermosetting plastics: phenolic resins (bakelite), amino resins (melamine), polyester resins, epoxy resins
Properties: tensile strength, elongation, relative density

Processes

18.6 Explain with reference to a structural unit in a compound the use of the term 'monomer'.

18.7 Describe the structure of polymeric materials.
Structure: linear, branched, cross-linked polymeric chains

18.8 Describe how the use of additives such as stabiliser or plasticiser in polymeric materials improves the properties.

18.9 Explain the advantages of using fillers in polymeric materials.
Advantages: cost, strength, density, wear rate, flexibility, material volume, colour

18.10 Describe the basic structure of composites and state the advantages of their use.
Basic structure: orientated glass fibre, matrix resin
Advantages: strength to weight ratio, multi-direction of strength

Non-ferrous metals

18.11 Specify the general advantages of non-ferrous metals as opposed to ferrous metals.
General advantages: resistance to corrosion, usually easier to cast, high thermal and electrical conductivity, usually lower density and of decorative appearance

18.12 Define the mechanical properties associated with pure aluminium and aluminium alloys.
Mechanical properties: low density, good electrical and thermal conductivity, high corrosion resistance and strength (aluminium alloy)

18.13 List typical applications for pure aluminium and aluminium alloys.
Applications: metal boxes, cooking utensils, aircraft bodywork and parts, automobile bodywork and parts

18.14 Define the mechanical properties associated with pure copper and copper alloys.
Mechanical properties: good electrical and thermal conductivity, high corrosion resistance

18.15 List typical applications for pure copper and copper alloys.
Applications: electrical parts, pump and valve parts, coins, instrument parts, springs

18.16 Define the mechanical properties associated with zinc and list typical applications.
Mechanical properties: good electrical thermal conductivity, high corrosion resistance, low melting point
Applications: car door handles, toys, carburettor bodies, components generally produced by die-casting

18.17 Define the mechanical properties associated with nickel and list typical applications.
Mechanical properties: good electrical thermal conductivity, high corrosion resistance, can be used at high temperatures
Applications: pipes and containers for the chemical industry, food-processing equipment, gas turbine parts

18.18 Define the mechanical properties associated with titanium and list typical applications.
Mechanical properties: low density, high strength, high corrosion resistance and can be used at high temperatures
Applications: aircraft body parts, aircraft turbine parts and chemical plant parts

Material properties

18.19 Compare the general properties of metals, ceramics and polymers.
General properties: density, melting point, tensile strength, hardness, resistance to corrosion, electrical, malleability

18.20 Describe the basic techniques of modifying the mechanical and physical properties of materials and the applications of coding systems.
Materials: metals, ceramics, polymers
Basic techniques: heat treatment/thermal effects, mechanical processing, chemical additives, alloying, surface coating

18.21 Describe atomic and bonding structures.
Atomic structures: face centred cube, body centred cube, close packed hexagonal
Bonding structures: metallic bonding, ionic bonding, covalent bonding

18.22 Identify grains and grain boundaries with respect to macro and micro-structures and the effect of processing on grain structures.
Processing: cold working, hot working, plastic deformation, recrystallisation

18.23 Explain the effects of heat treatment of steel structures with different carbon content by use of an iron-carbon equilibrium diagram.
Phases: annealing, normalising, quench hardening, eutectoid, hypo-eutectoid

18.24 Analyse and explain the transformation of steel under heat treatment using a time temperature transformation diagram ('S' curve).
Transformations: stable austenite, unstable austenite, coarse and fine pearlite, upper and lower banned, martensite

18.25 Explain the reasons for alloying materials.
Reasons: improvement of physical properties, mechanical properties, thermal resistant properties, machinability

18.26 Explain the solidification of two typical materials alloyed together using an equilibrium diagram.
Typical materials: nickel-copper alloy, lead-tin alloy, iron-carbon alloy

18.27 Describe how the mechanical and physical properties of carbon-steel alloy is altered with carbon content.
Properties: elongation, hardness, tensile strength, impact strength, ductility, malleability, machinability

Plant and equipment considerations

18.28 Realise the limited availability of plant, machinery and equipment within a company and the effect on production capacity.

18.29 Describe the advantages and disadvantages of subcontracting component parts or assemblies.
Advantages: access to plant and equipment which may not be available on site, reduce the need for investment in new plant or equipment, increase production and capacity, release equipment for other activities, costing simplified
Disadvantages: loss of control of production, delivery and quality

18.30 List plant and machinery, which would typically be found within a manufacturing company.
Plant and equipment: turning machines, milling machines, drilling machines, grinding machines, gear cutting machines, inspection equipment, marking out equipment and machine setting tools, various types of casting machines, various types of plastic forming equipment, cleaning equipment, various finishing tools and equipment

Drawing office systems

18.31 Describe typical job activities within the drawing and design office.
Job activities: trainee draughts person, detail draughts person, design engineer, project engineer, technical director, print room personnel

18.32 Sketch an organisational chart of a typical drawing and design office.

18.33 List the information, equipment and materials used within a drawing and design office.
Information, equipment and materials: paper (state sizes), drawing materials (state range), computerisation, library of catalogue information, standard material stock list, drawing files, historical data bank

Labour considerations

18.34 List engineering skills typically found within a manufacturing company.
Skills: draughting and design, various machining, various material processing, sales and marketing, management

18.35 Explain the factors that limit the production output of a company.

18.36 Explain the advantages and disadvantages of employing multi-skilled personnel.

Materials handling

18.37 Describe the benefits of proper materials handling.
Benefits: reduce handling costs, greater economy in use of space, reduced risk of stock damage, reduced labour requirements, less fatigue, increased safety

18.38 State the features which should be considered when examining any stores-handling procedures.
Features: position of stores, ability to handle material, the case for manual handling, method of packaging, incoming material, economy of movement, selection of suitable machinery, stores layout, operator training

18.39 Explain the four main purposes which are to be served by the introduction of mechanical handling equipment.
Purposes: to cater for loads too heavy to be manually handled, to save time, to save labour, to save space

18.40 Describe typical hand-operated equipment used in mechanical handling.

18.41 Describe typical power-driven equipment used in mechanical handling.

18.42 Describe briefly the relationship of materials handling to transport, and list the most important considerations.
Considerations: cost, time, reliability

18.43 Describe briefly a systems approach to mechanical handling.

Test specification for written paper Resources (2565-02-018)

This is a written examination paper lasting one and a half hours with five questions. Candidates must answer **all** 5 questions.

The examination paper will cover the knowledge specifications:

Topic	Approximate % examination weighting
Material range, carbon steels, polymeric materials and processes	20
Non-ferrous metals	20
Material properties	20
Plant and equipment considerations	10
Drawing office systems and labour considerations	10
Material handling	20

019 Plant Technology

Introduction

The aim of this unit is to investigate steam plant and steam generation, prime movers and compressors. It is recommended that candidate use the Steam Tables in the current edition of 'Thermodynamic and Transport Properties of Fluids' (SI units) by Rogers and Mayhew. The unit also covers combustion of fuels, instrumentation and control, air conditioning, pumps, and electrical supplies and installations.

Practical competences

Candidates must be able to do the following:

Steam generation

19.1 Visit a boiler house to observe and record the layout, functional elements, sub-systems and fittings associated with a steam generating plant.

Prime movers

19.2 Carry out a mechanical efficiency test on an SI or a CI engine.

Knowledge requirements

Instructors must ensure that candidates are able to:

Steam generation

19.3 State the purpose of each of the functional elements of a steam generator and represent the plant in block diagram form, showing the water/steam and air/gas circuits.
Elements: feed pump, economiser, evaporator, superheater, air fan, air pre-heater, chimney

19.4 Explain the essential difference between fire tube and water tube boilers.

19.5 Sketch a sectional view of a fire tube and water tube boiler showing the main constructional features.

19.6 List the boiler mountings required to comply with statutory safety requirements.
Mountings: valves (stop, safety, blowdown, drain and air release), water level gauges and indicators, high and low water alarm

19.7 Draw a sectional view and explain the operation of a safety valve.

19.8 Identify the types of fuel that are used to fire boilers.
Types: solid, liquid, gas

19.9 Explain the methods of stoking solid fuel boilers.
Methods: chain gate, underfeed, spreader, reciprocating gate

19.10 Describe with the aid of a sketch types of burners used on boilers.
Types: oil, gas, pulverised fuel

19.11 Explain and compare methods of providing the air supply to a boiler.
Methods: mechanical draught, balanced draught, induced draught

19.12 Explain the purpose of water treatment and describe the common impurities found in water.
Impurities: dissolved gases, dissolved mineral salts, organic matter, suspended matter

19.13 Identify the type and location of instruments used on a steam generating/boiler plant to monitor performance.
Instruments: gauges (pressure, temperature, draught and water level), CO_2 recorder

19.14 Explain the phases and phase changes in the formation of superheated steam at constant pressure from water at 0° C.

19.15 Explain the terms associated with the constant pressure formation of superheated steam.
Terms: saturation temperature, wet steam, drysaturated steam, superheated steam, degree of superheat

19.16 Explain enthalpy H as the total heat of a substance.

19.17 State that the term 'specific' relates to unit mass of a substance.

19.18 Identify the appropriate symbols used in steam tables to represent the specific properties of saturated water, the vapourisation phase, dry saturated steam and superheated steam.

19.19 Define dryness fraction and explain that the specific enthalpy $h_x = h_f + xh_{fg}$ and the specific volume $v_x = x\,v_g$

19.20 Sketch temperature-specific enthalpy and temperature-specific volume graphs to show the constant pressure formation of superheated steam and the application of symbols.

19.21 Use steam tables to determine the specific enthalpy and volume of wet steam, dry saturated steam and superheated steam.

19.22 Use linear interpolation to determine values that are not tabulated exactly in the superheated steam tables.

19.23 Explain that throttling is a constant enthalpy process.

19.24 Sketch a sectional view to show the main constructional features and explain the principle of operation of equipment used to measure the dryness fraction of steam.
Equipment: separating calorimeter, throttling calorimeter, combined throttling and separating calorimeter

19.25 Solve problems involving the overall efficiency of a steam generator.

Steam power plant

19.26 State the purpose of each of the functional elements of a power producing steam plant and represent the plant in block diagram form showing the water/steam, air/gas, cooling water and cooling air circuits.
Elements: steam generator, turbine, condenser, extraction pump, feed tank/hot well, feed heater, cooling tower, cooling water pump

19.27 Draw a block diagram to show the cooling water circuit for a condenser dissipating heat to the sea or a river.

19.28 Explain the essential difference between surface and jet condensers.

19.29 Sketch a sectional view of a surface condenser and jet condenser showing the main constructional features.

19.30 State the purpose and explain the working principles of the elements of a steam distribution system and represent the system in block diagram form.
Elements: valves (isolating, flow control, pressure reducing, pressure relief, safety), traps (mechanical, thermostatic, thermodynamic), separators (baffle, centrifugal)

19.31 Explain methods used to support steam pipe lines including the provision for expansions.
Support: bearer, anti-friction material, shoe
Provision: bellows, expansion bend

19.32 Explain the need for pipe insulation and state the desirable properties of insulating materials.

19.33 List asbestos free insulating materials.
Materials: calcium silicate, magnesia, mineral wood, ceramic fibres

19.34 Explain the continuity equation and use it to calculate pipe sizes given the required velocity and the steam pressure and condition.

Combustion of fuels

19.35 Define the atom and relative atomic mass.

19.36 Define the molecule and relative molecular mass.

19.37 Explain the use of chemical symbols.

19.38 Calculate the relative molecular mass of a substance eg CO_2, H_2O, CH_4

19.39 Explain the chemical equations which represent the complete combustion of carbon, hydrogen sulphur, carbon monoxide and methane.

19.40 State the percentage mass and volumetric analysis of air.

19.41 Calculate the stoichiometric air/fuel ratio for solid and liquid fuels given the percentage analysis by mass of the fuel.

19.42 Define the kilogramme mole (kmol) as a unit of volume.

19.43 Calculate the stoichiometric air/fuel ratio for gaseous fuel given the percentage analysis by volume of the fuel.

19.44 Explain why excess air is necessary for most combustion processes.

19.45 Solve problems relating to stoichiometric air/fuel and excess air.

Instrumentation and control

19.46 Identify instruments used to measure process variables (level, pressure, temperature, flow and frequency) and state their application.
Level: dipstick, sight glasses, buoyancy gauges, pressure transducers, electrical resistance devices
Pressure: manometers, Bourdon gauge, diaphragm gauge
Temperature: thermometers (mercury-in-glass, mercury-in-metal), pyrometers (thermocouples, resistance, optical, radiation)
Flow: positive displacement, differential pressure, variable area, inferential meters
Frequency: tachometer, tachagenerator, stroboscope

19.47 Explain terms associated with the performance of measuring systems.
Terms: calibration, error, accuracy, tolerance

19.48 Explain the purpose of each of the functional elements of a measurement system and represent the system in block diagram form.
Elements: transducer, signal conditioner, display (or recording) unit

19.49 Draw block diagrams to represent real measurement systems.

19.50 Distinguish between 'open loop' and 'closed loop' control systems.

19.51 Draw the basic block diagrams for automatic control systems using negative feedback.

19.52 Describe simple practical control systems.
Control systems: heating devices controlled by a thermostat, water level control, mechanical speed control for CI engine, pressure regulating valve

Prime movers

19.53 Explain the basic principles of operation of prime movers.
Prime movers: steam, gas and water turbines, SI and CI engines

19.54 Describe with the aid of diagrams the mechanical elements of a reciprocating engine.
Elements: cylinder, cylinder head and block, gasket, combustion space, coolant passages, piston and rings, connecting rod, crankshaft, crank case and sump, main bearings, flywheel

19.55 Sketch available cylinder and crankshaft arrangements.
Arrangements: single cylinder, multi-cylinder (in-line, V)

19.56 Explain with the aid of diagrams the cycles of operation for two and four-stroke engines.

19.57 Sketch p – v diagrams for two and four-stroke cycles for SI and CI engines.

19.58 Solve problems involving compression ratios.

19.59 Explain how ignition is achieved in SI and in CI engine.

19.60 Describe how to obtain an indicator diagram using an engine indicator.
Indicators: mechanical, Farnboro, electronic

19.61 Explain the term 'mean effective pressure' and determine its value from an indicator diagram.

19.62 Explain the principle of operation of engine dynamometers.
Dynamometers: rope brake, hydraulic, electric

19.63 Explain engine performance criteria.
Criteria: indicated power, brake power, mechanical efficiency

19.64 Calculate the criteria using accepted formulae.

19.65 Describe the procedure for a Morse test and explain how the results are used to determine the indicated power of a multi-cylinder SI engine.

Compressors

19.66 State the purpose of each of the functional elements of an air compressor plant and represent the plant in block diagram form.
Elements: electric motor, flywheel, air-filter, two-stage compressor, intercooler, after cooler receiver

19.67 State the statutory requirements of an air receiver.
Requirements: fittings (safety valve, pressure gauge, drain valve), manhole or handhole, regular inspection

19.68 Sketch sectional views to show the main constructional features and explain the principle of operation of air compressors.
Compressors: reciprocating, sliding vane, centrifugal, axial-flow

19.69 Define the specific heat capacity of a gas constant volume (cv) and at constant pressure (cp).

19.70 Derive the characteristic gas equation PV = mRT using the general gas law.

19.71 Explain an isothermal, adiabatic and polytropic process and state the corresponding gas laws.

Laws: PV = C, PVγ = C, where $\gamma = \frac{C_p}{C_V}$, $PV^n = C$

19.72 Use the characteristic gas equation and the general isothermal, adiabatic and polytropic laws to solve problems relating to the mass and changes in volume, pressure and temperature in the cylinder of a reciprocating air compressor.

19.73 Describe with the aid of a diagram ring main compressed air distribution system.

19.74 Define the term 'free air delivery' and explain why it is used to rate compressors.

19.75 Explain with the aid of a p – v diagram for a reciprocating air compressor why the most desirable process for compression is isothermal and why intercoolers are fitted between the stages of a multi – stage compressor.

19.76 Explain the continuity equation and use it together with the characteristic gas equation to calculate pipe sizes.

19.77 Explain the causes and describe the prevention of icing in air tools.

Air conditioning

19.78 State the reason for air conditioning.

19.79 Explain the term 'relative humidity'.

19.80 State the purpose of each of the functional elements of an air conditioning plant and represent the plant in block diagram form, showing the air circuit.
Elements: intake louvres, pre-heater, filter, refrigerator, washer, eliminator, re-heater, circulating fans, conditioned area

19.81 Explain the basic principles of operation of refrigerators.
Refrigerators: vapour-compression, absorption

19.82 List the general requirements for a refrigerant.
Requirements: large value of latent heat of vapourisation, working pressure such that leakage problems do not occur in evaporator, non-corrosive, non-flammable, non-explosive, non-toxic, does not damage the ozone layer

Pumps

19.83 Outline the basic principles of operation of pumps.
Pumps: positive displacement (reciprocating), rotary (radial and axial flow),centrifugal

19.84 State and explain that the total head of a fluid at a point in a system is equal to the summation

of the potential, kinetic and pressure heads, ie total head

$$= h + \frac{v^2}{2g} + \frac{p}{pg}$$

19.85 Explain Bernoulli's theorem.

19.86 Calculate the loss of head in straight pipes given D'Arcy's

formula, $hf = 4\,\frac{f\,l\,v^2}{2gd}$

19.87 Use standard charts to determine the length of an equivalent straight pipe which offers the same resistance to flow as given fittings (eg elbows, valves, tee pieces, etc).

19.88 Solve problems involving pipe flow in pipes.

Electrical supplies and installations

19.89 Describe and state the advantages of a national grid system.

19.90 Explain what is meant by a sub-station and describe the layout of a typical local distribution system.

19.91 Describe and draw circuit diagrams of consumer supply systems.
Systems: dc, ac (single and three-phase)

19.92 State and use the relationship between line and phase voltage and current for star and delta connected systems.

19.93 Explain the fundamental requirements that form the basis of the regulations relating to the design, selection, inspection and testing of electrical installations.

19.94 Draw a circuit diagram to show the arrangement of the equipment at the incoming supply point for a small single-phase supply.

19.95 Draw circuit diagrams to show the layout of typical factory supply systems, eg three-phase ring main.

19.96 Explain the use of switchgear.
Switchgear: switches, isolators, contactors, circuit breakers

19.97 Describe methods of circuit protection.
Method: fuses, overcurrent protective devices (electromagnetic, thermal, induction)

19.98 Explain the term 'earth-leakage protection, and describe voltage-operated and current-operated residual current devices.

19.99 Distinguish between power (kW) and the product of volts and amperes (kVA) in an ac circuit.

19.100 Define power factor as $\frac{kW}{kVA}$

19.101 Explain the terms 'maximum demand' and 'load factor'.

19.102 State that industrial electricity tariffs depend upon kVA, and maximum demand.

19.103 Calculate electricity charges based on typical industrial tariffs.

19.104 State the type of cable used for a fixed installation and for a portable appliance.

19.105 Describe and compare the use of common wiring systems.
Systems: cables in ducts, trunking, trays and conduits (metallic and non-metallic) composite cables, mineral-insulated metal-sheathed cable

19.106 Select wiring systems for particular plant requirements.

19.107 Explain the purpose and describe the procedure for insulation, continuity and earth loop impedance testing.

Test specification for written paper Plant Technology (2565-02-019)

This is a written examination paper lasting three hours with ten questions. Candidates must answer **all** 10 questions.

The examination paper will cover the knowledge specifications:

Topic	Approximate % examination weighting
Steam generation	20
Steam power plant	10
Combustion of fuels	10
Instrumentation and control	10
Prime movers	12
Compressors	10
Air conditioning	8
Pumps	8
Electrical supplies and installations	12

Practical assignment 020/1: Visit to a boiler house

1 Competence references

19.1

2 Preparation

2.1 **Location of test**
Boiler House on a local industrial site.

The training centre or other venue where supervising and appropriate working conditions will be provided.

2.2 **Requirements**
During the visit:

appropriate safety clothing

clip board with A4 lined and square grid drawing paper and pencil.

At the training centre following the visit:

either, writing materials and manual drawing facilities, or a word processor and CAD system.

2.3 **Instructor notes**
A visit of appropriate duration (eg half day) to a boiler house known to the instructor is to be arranged.

Candidates are required to visit the selected boiler house to observe and record the layout, functional elements, sub-systems and fittings associated with the steam generating plant. Following the visit they are required to write a report.

Prior to, and at the start of, the visit candidates must be made aware of all health and safety requirements.

Candidates should be provided with a list of functional elements and fittings appropriate to the plant and given help and guidance during the visit.

3 Candidates' instructions

You are required to visit a boiler house selected by your instructor, to observe and record the layout, functional elements, sub-systems and fittings associated with a steam generating plant. Following the visit you are required to write a report.

3.1 The total time allowed for this assignment is 10 hours. You are advised to read all the instructions before making the visit.

3.2 Visit the selected boiler house.

3.3 Adhere to all health and safety requirements.

3.4 Establish the purpose of the plant.

3.5 Observe and record the following:

3.5.1 functional elements

3.5.2 sub-systems (water treatment, fuel and control)

3.5.3 fittings (valves and gauges)

3.5.4 safety devices and alarms.

3.6 Using the square grid paper draw free hand a block diagram to show the plant lay-out.

3.7 Before leaving, check with your instructor that you have all the information required, as it will not be possible to arrange a second visit.

3.8 Compile a report on the visit under the following headings:

3.8.1 purpose of the plant

3.8.2 brief statement of the purpose and, where appropriate, the type of each functional element, sub-system, fitting, safety device and alarm

3.8.3 block diagram to show the plant layout and path of water/steam and blue gases.

3.9 Ensure your name is on your work and hand it to your instructor.

4 Marking

4.1 Assignment completed in 10 hours. ( )

4.2 Boiler house visited. [ ]

4.3 All health and safety requirements adhered to. [ ]

4.4 Purpose of plant established. [ ]

4.5 The following observed and recorded:

4.5.1 functional elements [ ]

4.5.2 sub-systems (water treatment, fuel and control) [ ]

4.5.3 fittings (values and gauges) [ ]

4.5.4 safety devices and alarms. [ ]

4.6 Block diagram to show plant layout drawn freehand on square grid paper. [ ]

4.7 Information recorded checked with instructor before leaving. [ ]

4.8 Report on visit compiled under the following headings:

4.8.1 purpose of visit [ ]

4.8.2 brief statement of the purpose and, where appropriate, the type of each functional element, sub-system, fitting, safety device and alarm [ ]

4.8.3 block diagram to show the plant layout and path of water/steam and blue gases. [ ]

4.9 Name on work and work handed to instructor. [ ]

5 Assignment completion

The candidate will have satisfactorily completed this assignment if successful in items marked with a [ ].

Provided 3.7 is complied with, it should only be necessary for an unsuccessful candidate to re-submit the final report.

Practical assignment 020/2: Mechanical efficiency test on an internal combustion engine

1 Competence references

19.2

2 Preparation

2.1 **Location of test**
The training centre or other venue where supervision and appropriate working conditions will be provided.

2.2 **Requirements**
For the test:

clip board with A4 lined paper and pencil

multi-cylinder SI engine

dynamometer (hydraulic and electrical)

tachometer.

For compiling the report:

writing materials or a word processor.

2.3 **Instructor notes**
Candidates are required to carry out a Morse test on a SI engine and write a report.

The syllabus requires candidates to carry out a mechanical efficiency test on an engine. If facilities are not available for a Morse test, this assignment can be used as a guide for an assignment on a mechanical efficiency list using alternative equipment, eg single cylinder CI engine, rope brake and mechanical indicator.

Candidates must be aware of all health and safety requirements and should be given guidance on use of the equipment.

3 Candidates' instructions

You are required to carry out a Morse test on an SI engine and write a report.

3.1 The total time allowed for this assignment is 4 hours. You are advised to read all the instructions before commencing work. If you do not understand all the instructions then ask your instructor.

3.2 Adhere to all the health and safety instructions.

3.3 Bring the engine up to working temperature, select the speed for the test and load the dynamometer. Record the speed and load.

3.4 Short the sparking plug lead to one cylinder, reduce the load until the speed is restored to the original speed selected for the test.

3.5 Repeat 3.4 for each cylinder in turn.

3.6 Using the results recorded in 3.4 and 3.5 calculate the following engine performance criteria:

3.6.1 brake power with all cylinders firing

3.6.2 engine indicated power

3.6.3 mechanical efficiency.

3.7 Produce a report under the following headings:

3.7.1 object of test

3.7.2 associated theory

3.7.3 description of engine and test equipment

3.7.4 description of test procedure

3.7.5 record of readings taken and calculations made

3.7.6 conclusions.

3.8 Ensure your name is on your work and hand it to the instructor.

4 Marking

4.1 Assignment completed in 4 hours. ( )

4.2 All health and safety requirements adhered to. [ ]

4.3 Engine brought to working temperature, speed selected and dynamometer loaded. Speed and load recorded. [ ]

4.4 Spark plug lead for one cylinder shorted, load reduced until speed is restored to original speed selected for the list. [ ]

4.5 3.4 repeated for each cylinder in turn. [ ]

4.6 Results recorded in 3.4 and 3.5 used to calculate the following engine performance criteria:

- 4.6.1 brake power with all cylinders firing [ ]
- 4.6.2 engine indicated power [ ]
- 4.6.3 mechanical efficiency. [ ]

4.7 Report completed under the following headings:

- 4.7.1 object of test [ ]
- 4.7.2 associated theory [ ]
- 4.7.3 description of engine and test equipment [ ]
- 4.7.4 description of test procedure [ ]
- 4.7.5 readings taken and calculations made recorded [ ]
- 4.7.6 conclusions. [ ]

4.8 Name on work and handed to instructor. [ ]

5 Assignment completion

The candidate will have satisfactorily completed this assignment if successful in all items marked with [ ].

A period of seven days should elapse before unsuccessful candidates are permitted to repeat the assignment.

021 Plant Installation and Maintenance

Introduction

The unit covers procedures, equipment and devices relating to plant installation and maintenance. It is paramount that statutory safety requirements and general health and safety procedures are emphasised.

Knowledge requirements

Instructors must ensure that candidates are able to:

Maintenance procedures

21.1 State the purpose of maintenance management.

21.2 Identify various forms of maintenance.
Forms: planned, unplanned, preventive, scheduled, condition-based, corrective, emergency

21.3 Describe the 'permit to work' system.

Bearings

21.4 State that bearings are classified as either sliding element or rolling element.

21.5 State the materials used for shafts and bearings.
Shafts: alloyed and unalloyed steels
Bearings: Sliding element – bronze, phosphor-bronze, sintered bronze, bronze-lined steel, white metal lining, cast iron, nylon, PTFE coated, rolling element – alloyed steel for balls, rollers and races

21.6 Identify and state the application of types of sliding element bearings.
Types: plain journal, foot step, tilting wedge thrust, machine guide ways

21.7 Identify and state the application of types of ball and roller rolling element bearings.
Ball: radial, angular contact, self-aligning, axial thrust
Roller: cylinder, taper, needle

21.8 Describe the assembly procedures for rolling element bearings.

Lubrication

21.9 State the reasons for lubricating bearings.
Reasons: reduce friction, dissipate heat, prevent corrosion, aid to preventing the ingress of water and grit

21.10 State that a lubricant can be solid, liquid or gas and give examples of each type.

21.11 Explain the significance of properties and terms associated with lubricants.
Properties and terms: viscosity, flash point, pour point, emulsification, acidity

21.12 Explain the need for additives to be used with lubricants.
Additives: anti-oxidants, pressure, de-foaments, graphite, molydenum di-sulphide

21.13 Describe with the aid of diagrams the types of lubrication systems.
Types: gravity, ring, splash, mist, circulation

21.14 Explain the need to use planned lubrication procedures.

21.15 State the hazards associated with the dilution, and biological contamination of lubricants.

Gaskets, seals and packings

21.16 Identify gaskets, seals and packings, state their application and describe procedures for assembly, adjustment and maintenance.
Application: dynamic, rotary, reciprocating, stationary

Locating and driving devices

21.17 Identify locating and driving devices, state their application and describe procedures for assembly.
Devices: dowel pins, cotter pins, keys (parallel, Woodruff and gib head)

Screw fasteners

21.18 Identify types of screw fasteners available and give typical applications.
Types: bolts, studs and nuts, screw (hexagon, square, socket, slotted, counter-sunk and set)

21.19 Sketch types of nut locking devices.
Types: positive, frictional

Shaft transmission systems

21.20 Describe methods of connecting different shaft arrangements.
Aligned shafts: couplings (rigid, flexible), clutches (dog, conical, plate), fluid flywheels
Out of alignment shafts: couplings (manufactured from flexible materials), Hook's joint
Parallel shafts: flat and vee belts, spur gears
Shafts at 90° in different planes: flat belts, worms and worm wheels, spiral gears, hypoid bevel gear
Shafts at 90° in same plane: flat belts, friction wheels (bevel and flat) bevel gears

Welding

21.21 Describe with the aid of sketches welding processes and give typical applications for each process.
Processes: oxy-fuel, manual metal-arc, metal-arc gas-shielded (MAGS), tungsten-arc gas-shielded (TAGS), plastic

Pipe joining

21.22 Describe methods of pipe jointing.
Methods: welded, threaded, sleeved, flanged, plastic pipes (adhesives)

Lifting and conveying

21.23 State the statutory (legal) requirements for the safe use of lifting equipment.
Requirements: current insurance certificate, frequency of testing, safe working load clearly marked, periodic examination by a competent person

21.24 Describe lifting and conveying equipment, giving typical applications.
Lifting: accessories, devices (chain blocks, winches, jacks), cranes (mobil, tower, derrick, gantry, overhead travelling), hoists (manual, electric, pneumatic)
Conveying: crowbars, pinch bars, rollers, skates, mobil ramps, chocks

Foundations

21.25 State the factors which effect the provision of adequate foundations for plant.
Factors: initial ground conditions, mass and size of plant, plant operation, rigidity and stability of installation

21.26 Describe foundations for plant equipment.
Foundations: sub-soils, materials and mixes used, types (isolated and inertia block, solid)

21.27 Describe fixing devices, giving advantages and limitations of each type.
Types: expanding plug, self drill anchor, epoxy resin set bolts, adhesives and pads, rag bolts

21.28 Describe anti-vibration mountings, giving advantages and limitations of each type.
Types: spring, rubber, felt, cork, woven wire, synthetic compounds

Installing and commissioning procedures

21.29 Describe methods of levelling plant during installation.
Methods: use of straight edges, gauge blocks, precision levels, sweep optical square with micro-alignment telescope, plumb lines, laser beams

21.30 Describe typical alignment tests to be carried out on plant and machine tools.
Typical alignment tests: motor to pump, machine tool spindle to bed

21.31 Compare the advantages and limitations of methods of checking alignment.
Methods: straight edges, gauge blocks, dial test indicators, piano wire and precision level, auto collimator, feeler gauges, laser beams

21.32 State the effects of incorrect alignment on machinery.

21.33 Describe the general commissioning procedures for plant following installation or maintenance.

Test specification for written paper Plant Installation and Maintenance (2565-02-021)

This is a written examination paper lasting one and a half hours with five questions. Candidates must answer **all** 5 questions.

The examination paper will cover the knowledge specifications:

Topic	Approximate % examination weighting
Maintenance procedures, installing and commissioning	20
Bearings and shaft transmission	20
Lubrication and gaskets	20
Locating and driving, screw fastening, welding and pipe jointing	20
Lifting, conveying and foundation	20

Appendix A
Practical assignments

Two assessment methods are used in the 2565 Technician Awards in Engineering programme – written questions and practical assignments.

Practical assignments
Some of the units or components in the Diploma level of this programme are assessed by practical assignments only and others have a related practical assignment or assignments. These assignments may call on skills covered in other sections but reference is only made to the competences covered by the marking criteria. Wherever relevant the option is given for you to use local names, local currencies, alternative measurements and paper sizes, or to design an alternative assessment. Where this option is taken **the assignment must be of a comparable standard** to ensure consistency between centres using this programme. The assignment must be documented and available for the visiting verifier. ALL assignments must be successfully completed.

The assignments may be administered at any time convenient to the instructor and to the candidate.

The practical assignments in this publication are intended to be photocopied.

Instructor notes
It is essential that you read these before attempting to administer the practical assignment. Practical assignments usually require you to prepare material for the assignment.

Candidate instructions
Make sure every candidate has a copy of these before beginning the practical assignment.

Marking
The marking is based on performance criteria or outcomes related to the practical assignment, to which the answer will always be either 'yes – the candidate achieved this' or 'no – the candidate did not achieve this'. Credit is given for those performance competences for which the answer is 'yes – the candidate achieved this'.

Supervision
All assignments require supervision and you must make sure that the results reflect only the individual candidate's own work. You must keep all assessment documentation and material in a file for each candidate until the results have been agreed by the visiting verifier and until confirmation of result has been received from City & Guilds.

Records, results and certification
Successful completion of the related practical assignments for each unit needs to be recorded and then sent to City & Guilds. We suggest that you keep a record of each individual's achievements which may then be transferred to the entry forms. A model is given at the end of this section but you may use any form of record keeping that is convenient and accessible.

In order to gain certification, results for successfully completed practical assignments must be sent to City & Guilds. Results for practical assignments are entered onto Form S which is then countersigned by the visiting verifier and sent to us.

An advantage of this programme is that candidates who successfully complete the practical assignments for a single unit may, if they wish, claim a Certificate of Unit Credit. This may be beneficial for those candidates who only wish to complete part of this programme. Send these claims to us at any time provided the visiting verifier has countersigned the Form S.

Candidates wishing to gain the full award (Applied Certificate, Diploma or Advanced Diploma) must successfully complete all the relevant practical assignments. We recommend that their practical results are sent at the time of, or shortly before the date of the written examinations.

Visiting verifier
The operation of this programme requires the appointment of a visiting verifier. **The visiting verifier must countersign the results of the practical assignments on Form S**. The visiting verifier should also be able to inspect records and candidates' work to verify the results before submission.

Technician Diploma in Applied Mechanical Engineering – Design and Manufacture
Candidate assessment record

***Candidates must complete these assignments**

Candidate's name and number

Centre name and number

Assessment reference		Date completed	Instructor signature	Instructor name
013/1	Creative Drawings*			
013/2	Editing, Dimensioning and Use of Blocks*			
014/1	Detail Drawing of a Component*			
014/2	Assembly Drawing of a Machine Vice*			
014/3	Loci of Standard Motions*			
014/4	Cam Design*			
016/1	Manufacturing a Surface Gauge*			

Technician Diploma in Applied Mechanical Engineering – Design and Manufacture
Candidate assessment record

***Candidates must complete these assignments**

Candidate's name and number

Centre name and number

Assessment reference		Date completed	Instructor signature	Instructor name
013/1	Creative Drawings*			
013/2	Editing, Dimensioning and Use of Blocks*			
014/1	Detail Drawing of a Component*			
014/2	Assembly Drawing of a Machine Vice*			
014/3	Loci of Standard Motions*			
014/4	Cam Design*			
020/1	Visit to a Boiler House*			
20/2	Mechanical Efficiency Test*			

[This page is intentionally blank]

Published by City & Guilds
1 Giltspur Street
London
EC1A 9DD
T +44 (0)20 7294 2850
F +44 (0)20 7294 2413
intops@cityandguilds.com
www.cityandguilds.com

City & Guilds is a registered charity established to promote education and training

SP-52-2565